CH560 Series

The New Generation of Airflow Case

DeepCool

Case Features

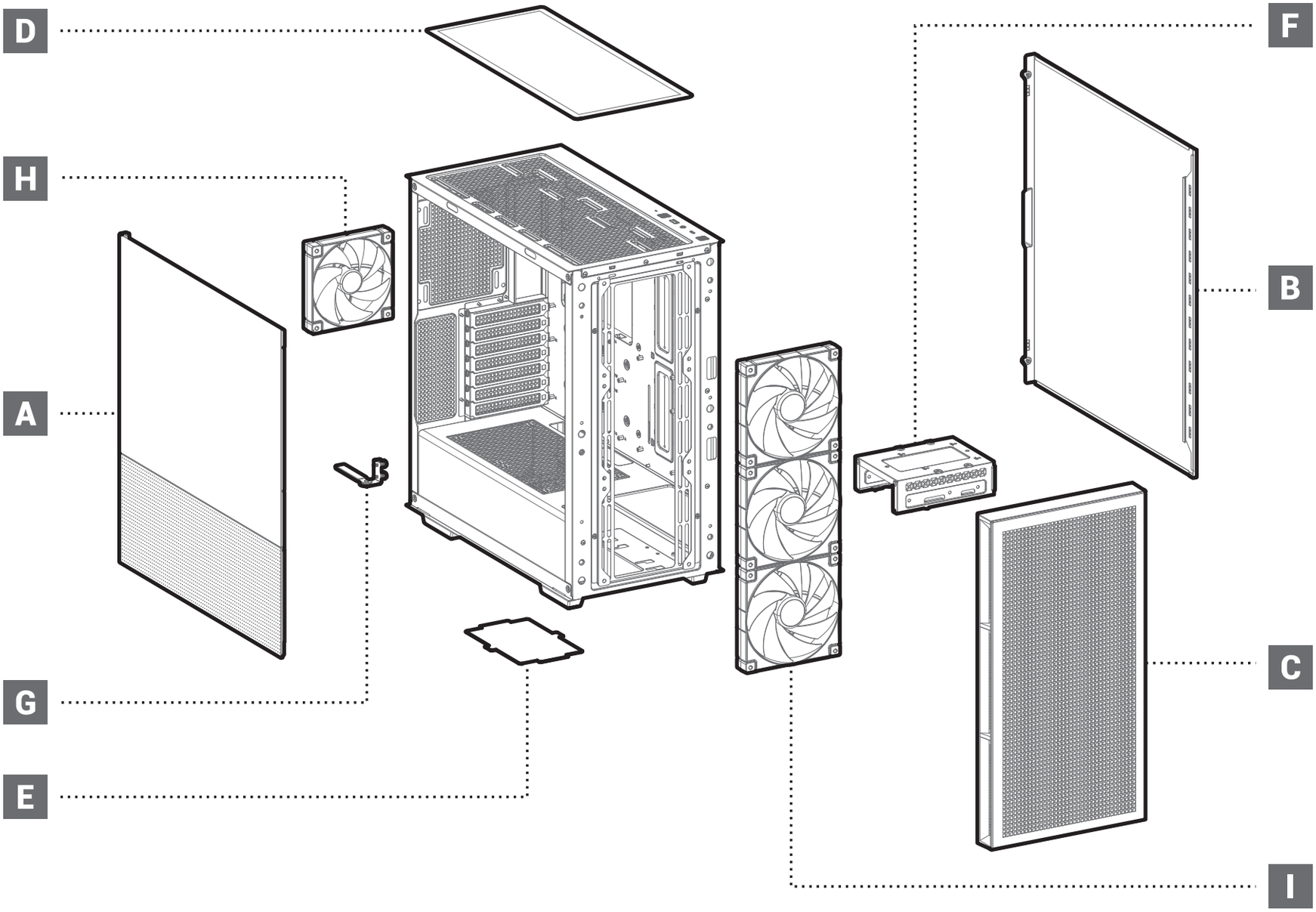

Case Specifications

Length:458mm
Width:230mm
Height:471mm

Maximum GPU length:380mm
Maximum PSU length:170mm
Maximum CPU Cooler length:175mm

Radiator compatibility:
Front: 120/140/240/280/360mm
Top: 120/140/240/280/360mm
Rear: 120/140mm

Fan locations:
Front: 3×120 / 3×140mm
Top: 3×120 / 2×140mm
Rear: 1×120 / 1×140mm
PSU Shrouded: 2×120mm

A

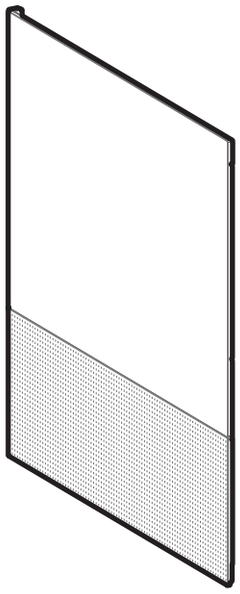

Tempered Glass Side Panel ×1

B

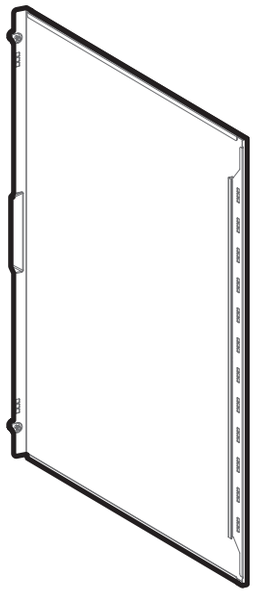

Right Side Panel ×1

C

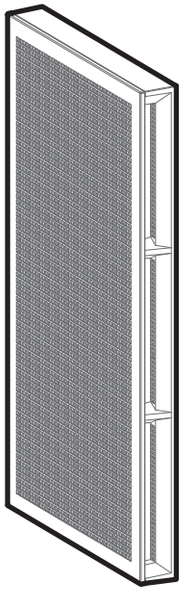

Front Panel ×1

D

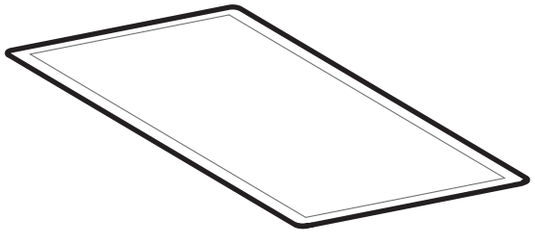

Top Dust Filter ×1

E

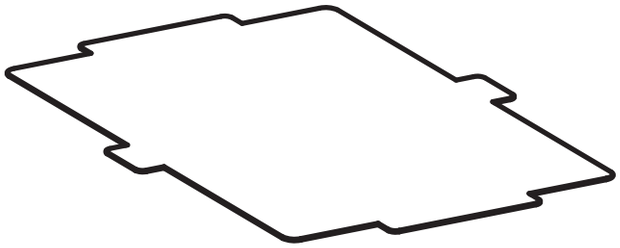

PSU Dust Filter ×1

F

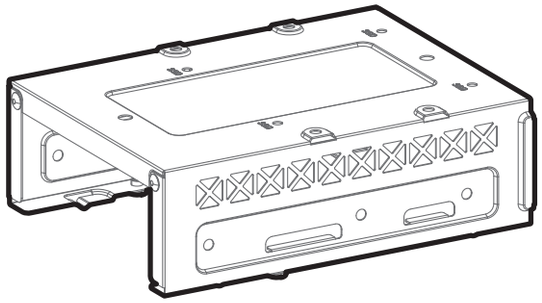

HDD Cage ×1

G

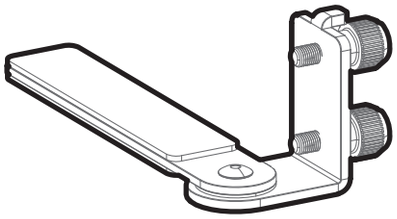

GPU Bracket ×1

H

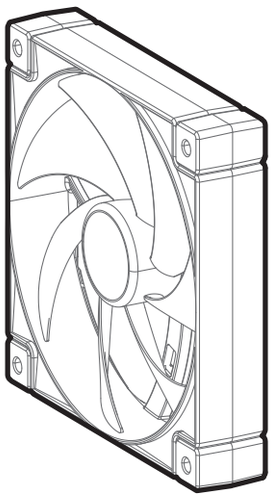

120mm ARGB Fans ×1

I

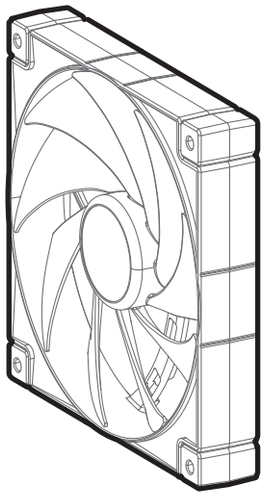

140mm ARGB Fans ×3

Accessory Kit Contents

J

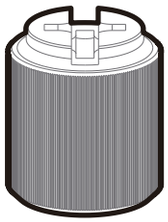

Sleeve screw **×1**

K

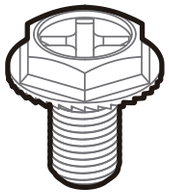

PSU screws **×6**

L

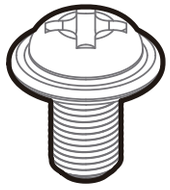

Motherboard screws **×22**

M

SSD screws **×8**

N

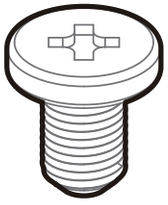

HDD screws **×12**

O

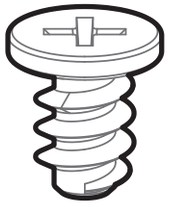

Fan screws **×9**

P

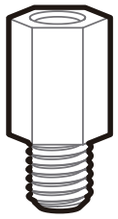

Stand off **×4**

Q

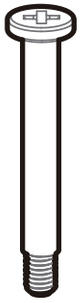

Power compartment Fan screw **×8**

R

Cable ties **×11**

Specifications

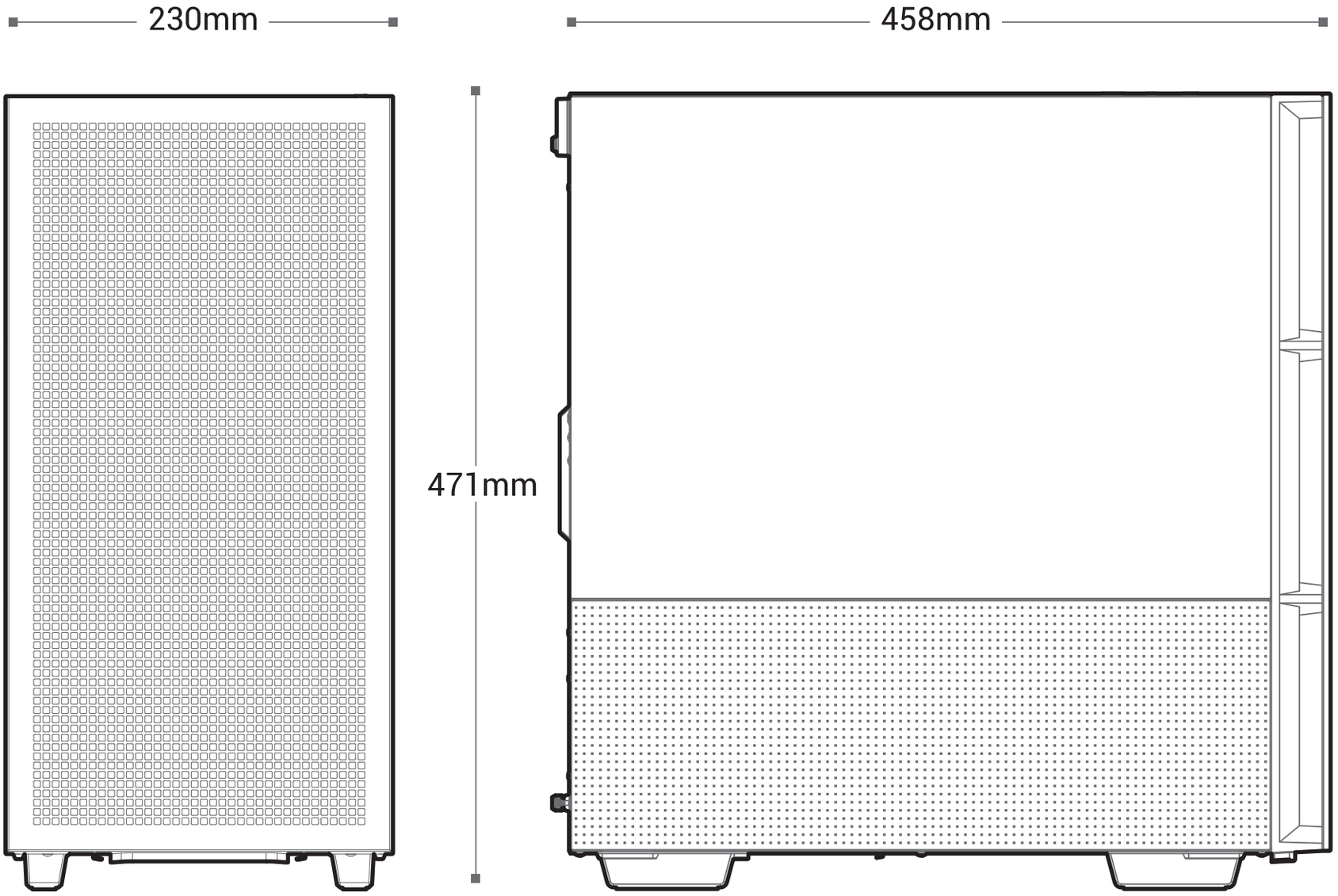

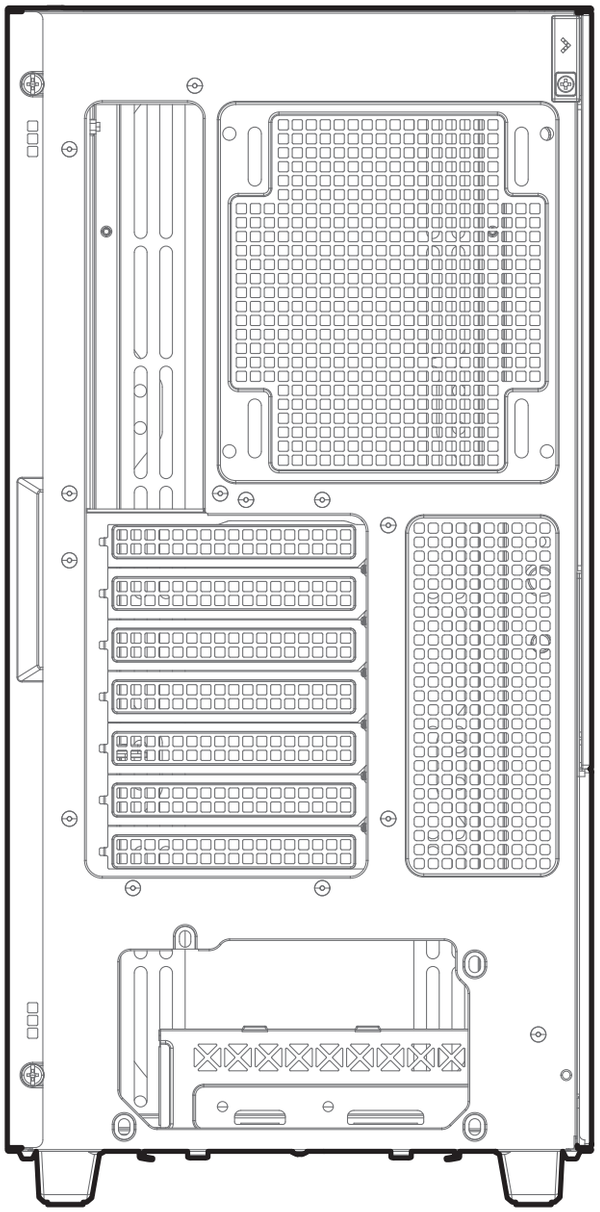

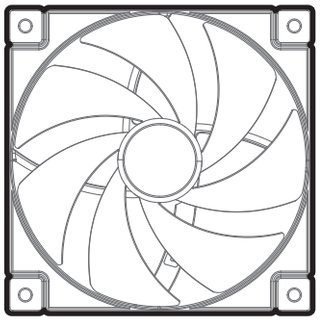

120mm×1
140mm×1

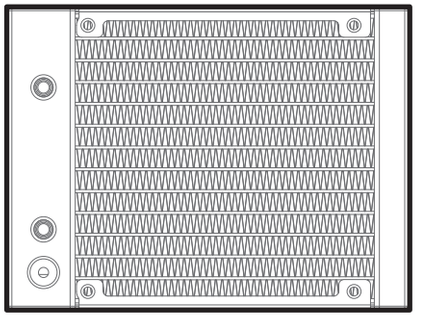

120/140mm

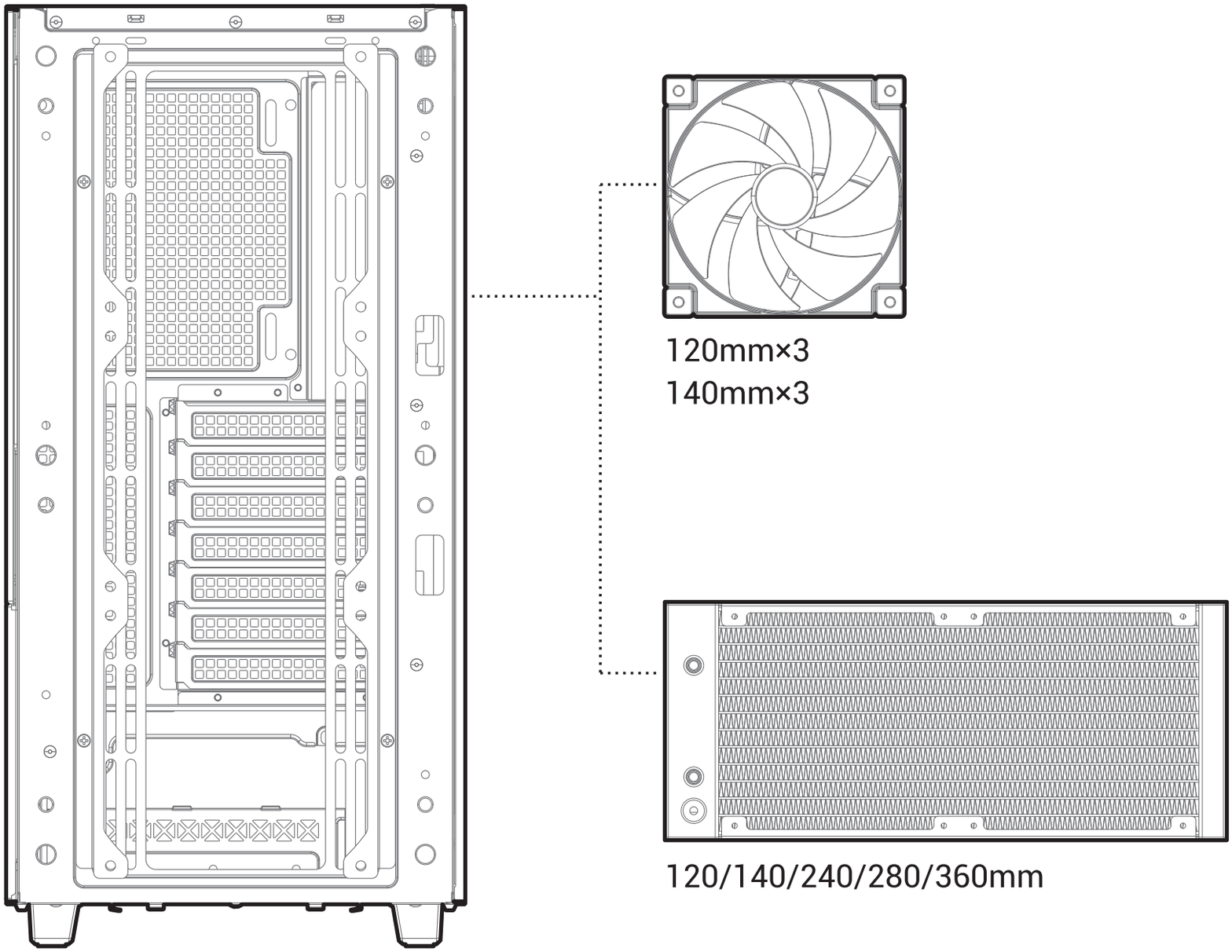
120mm×3
140mm×3
120/140/240/280/360mm

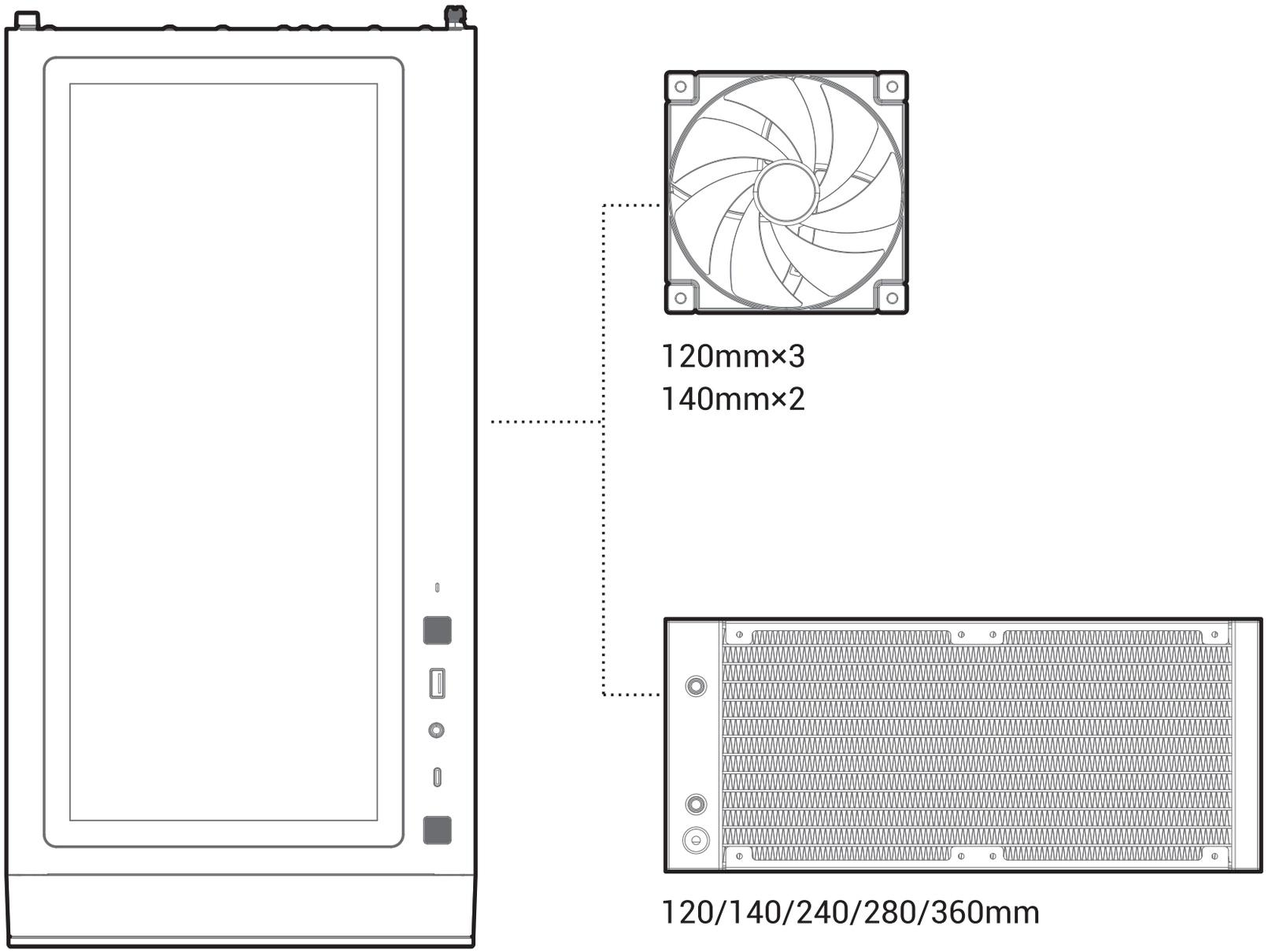
120mm×3
140mm×2
120/140/240/280/360mm

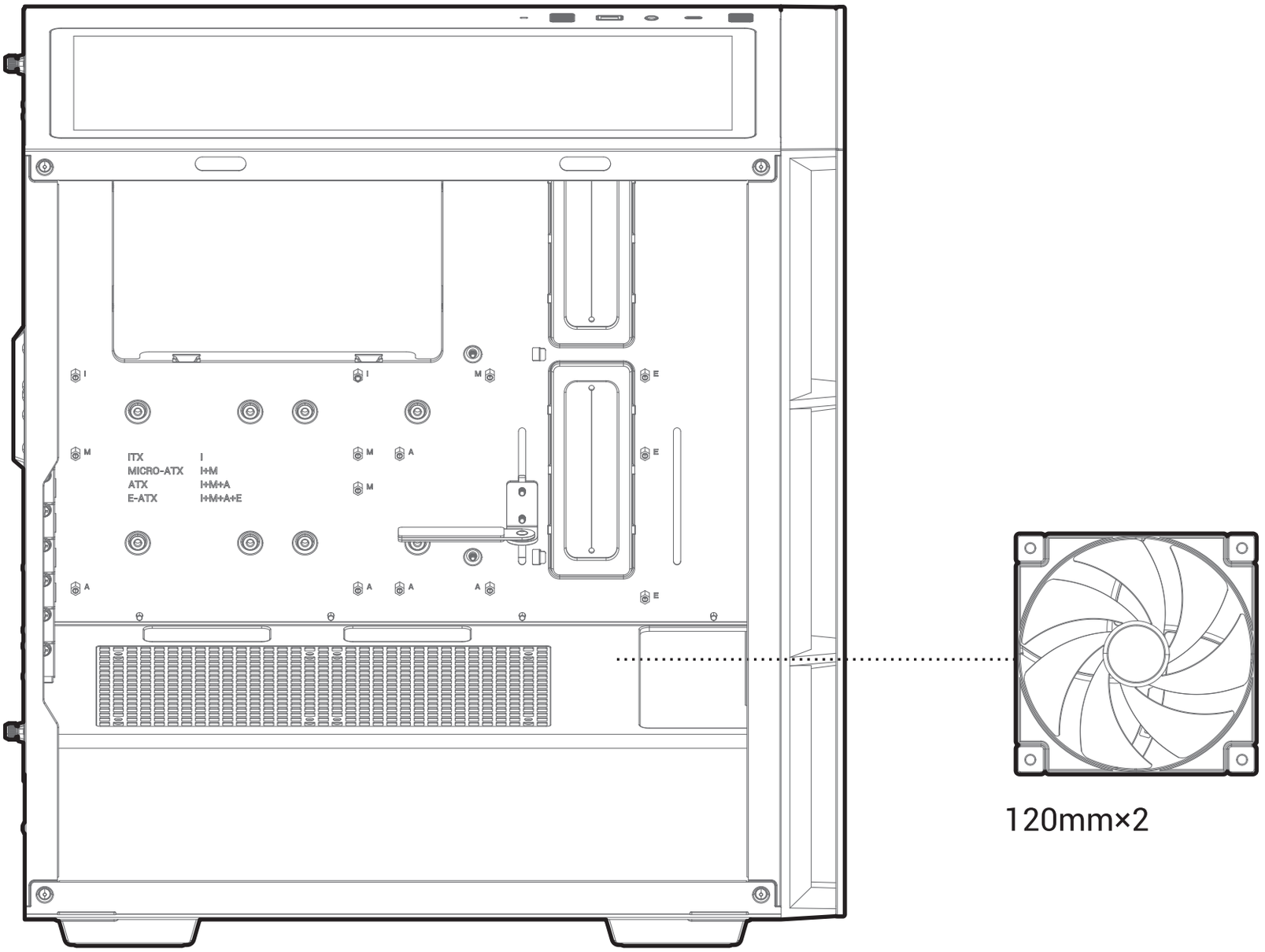
ITX I
MICRO-ATX I+M
ATX I+M+A
E-ATX I+M+A+E
120mm×2

Removing the Tempered Glass Side Panel

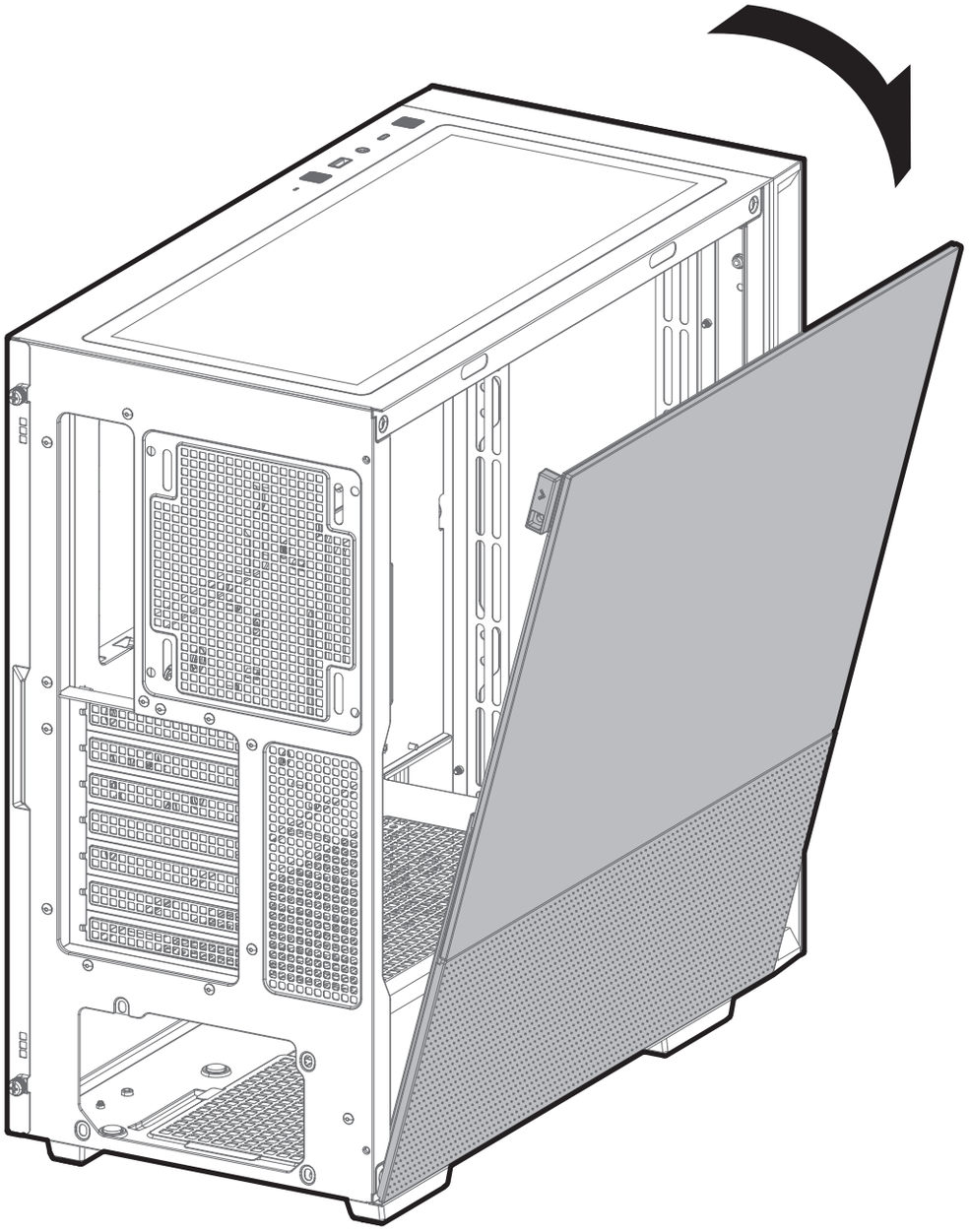

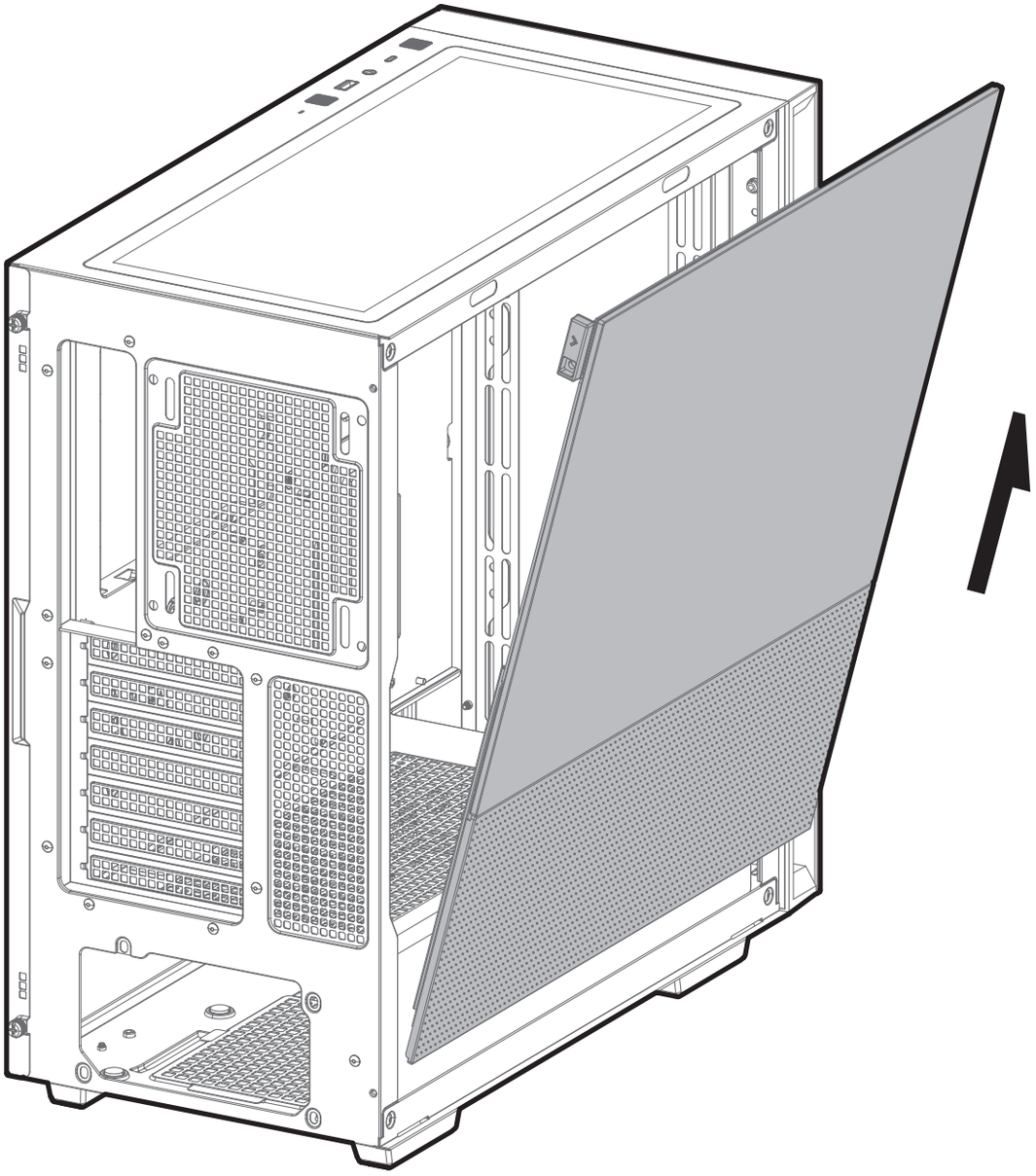

Removing the Metal Side Panel

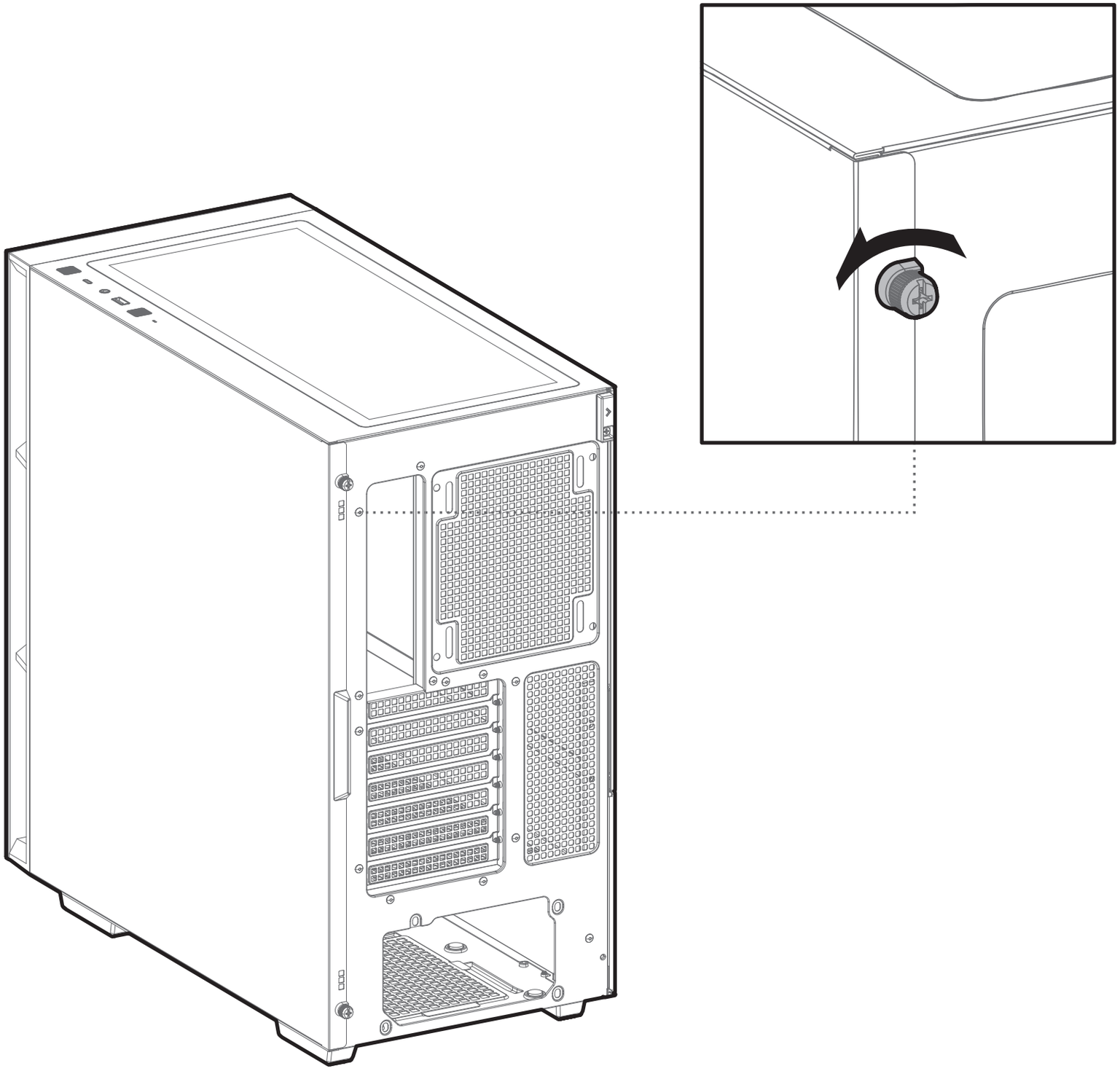

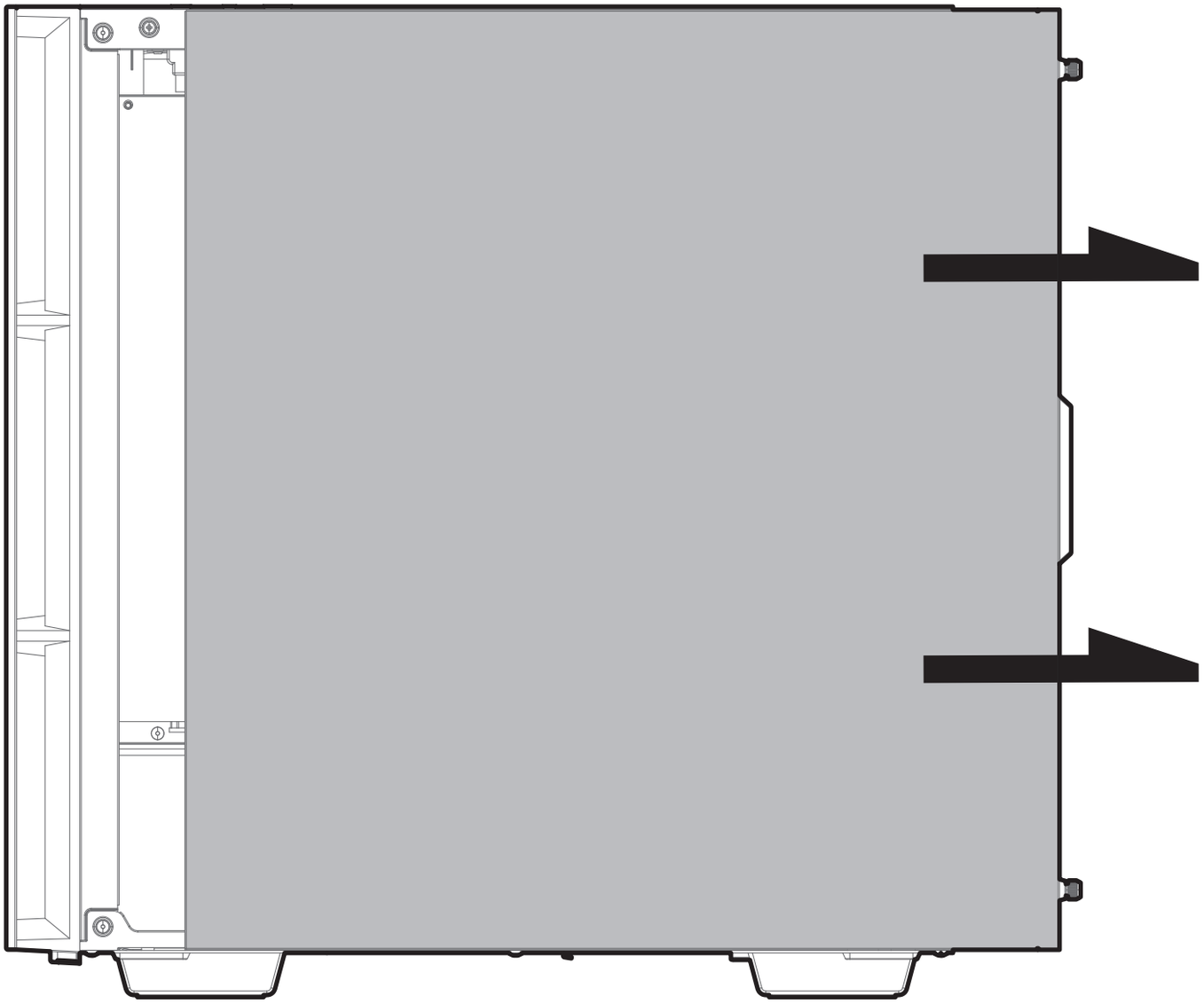

Removing the Front Panel

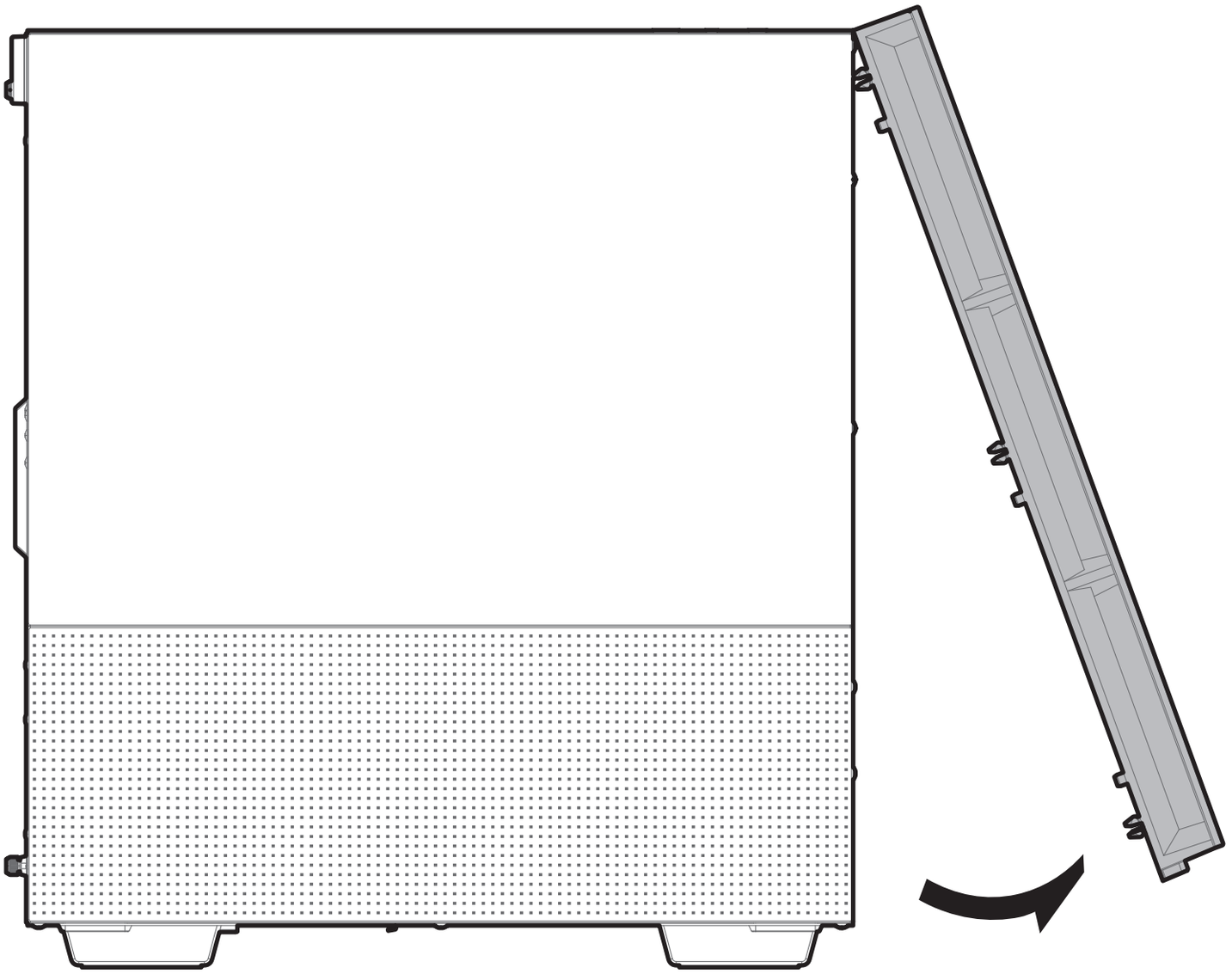

Installing the Motherboard

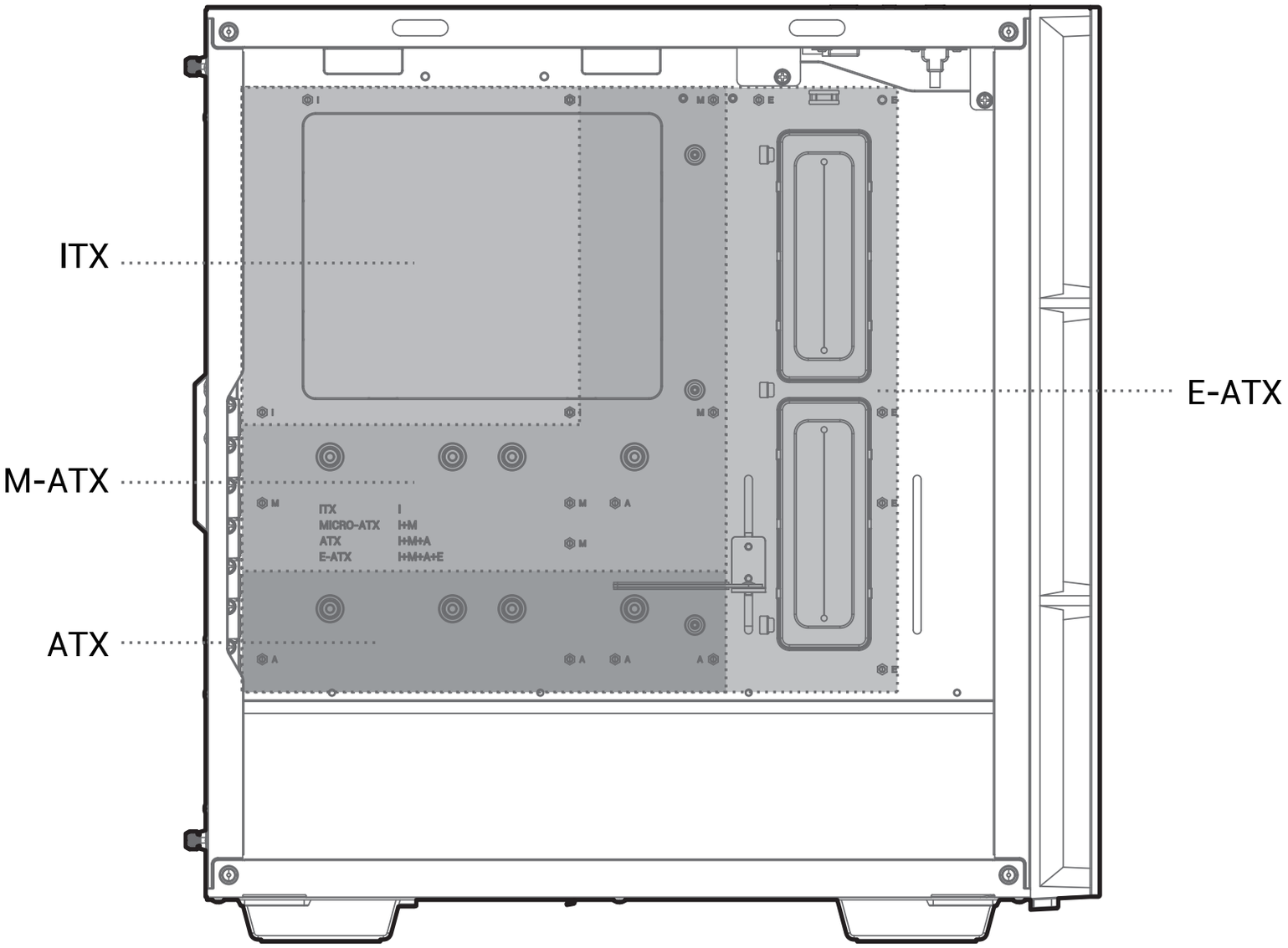

Installing the GPU

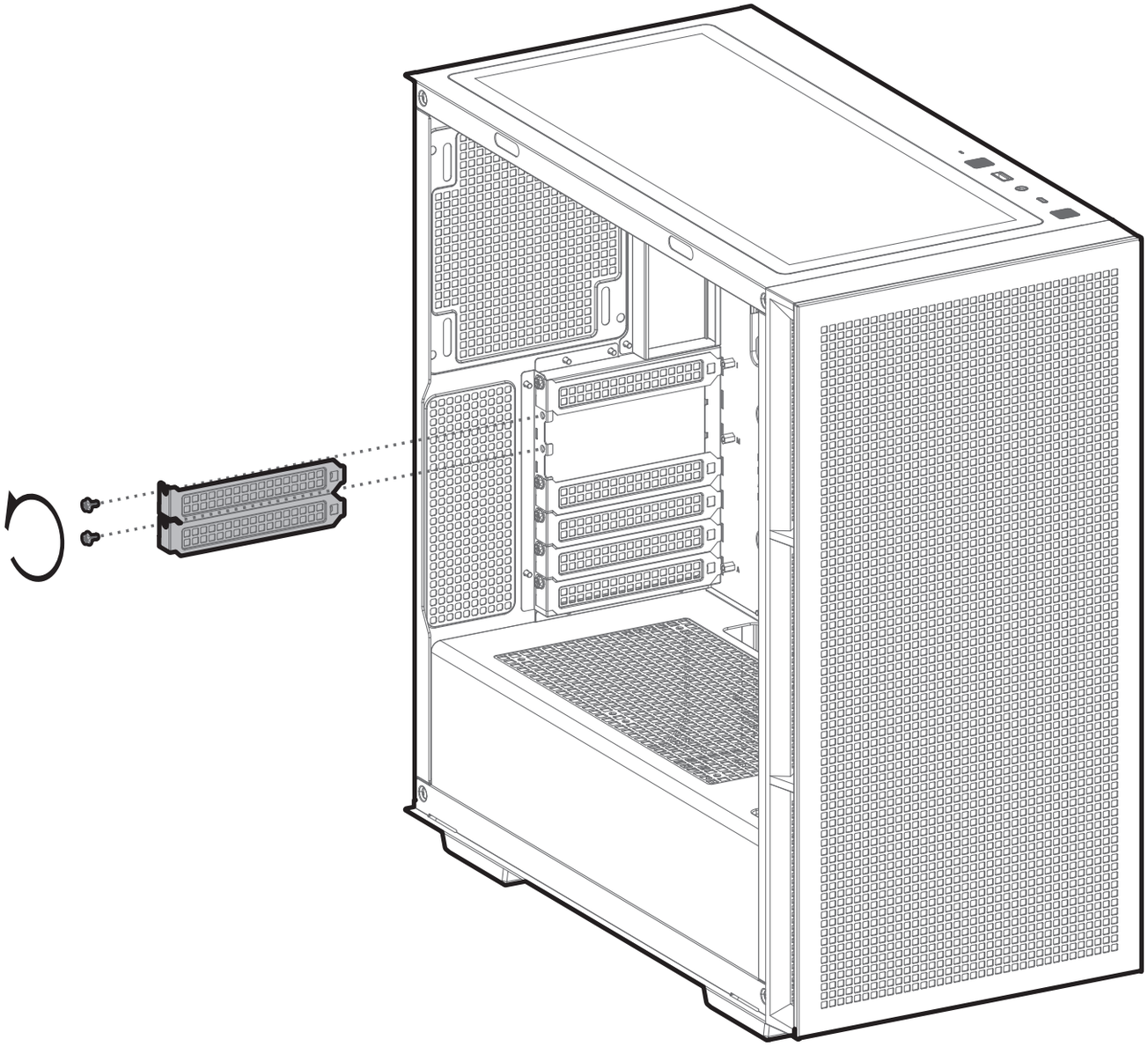

Installing HDDs

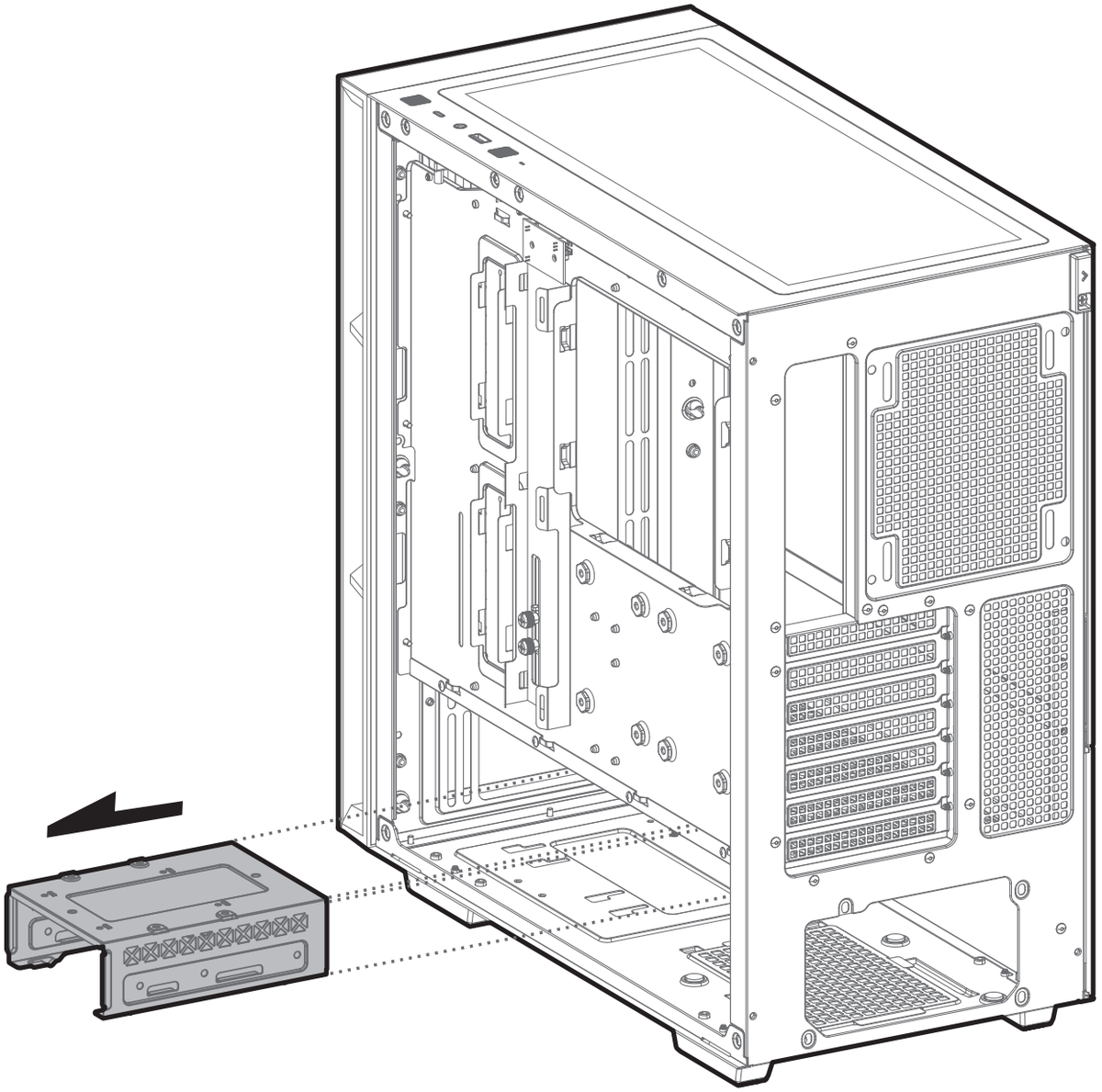

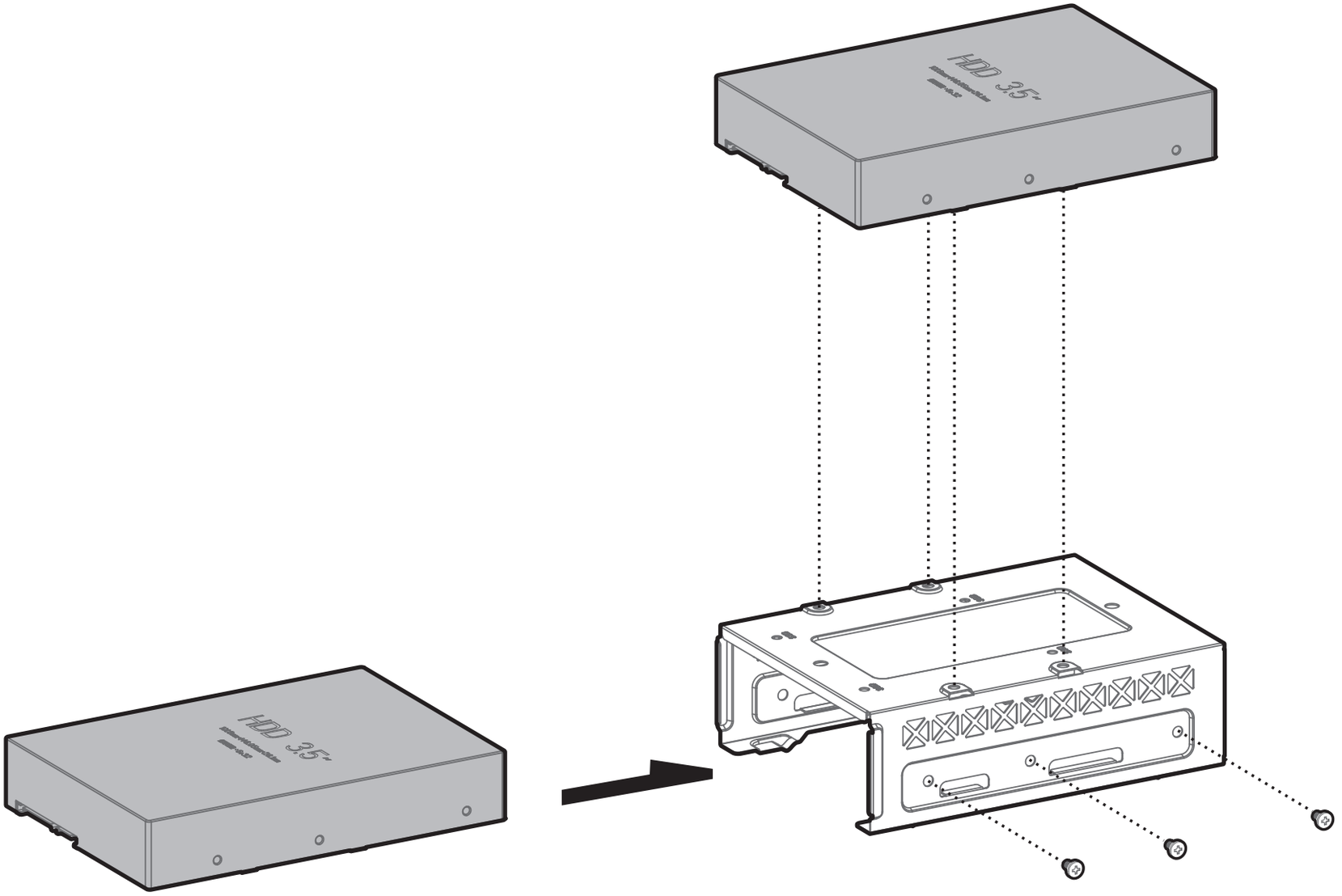
HDD 3.5"
HDD 3.5"

Installing SSDs

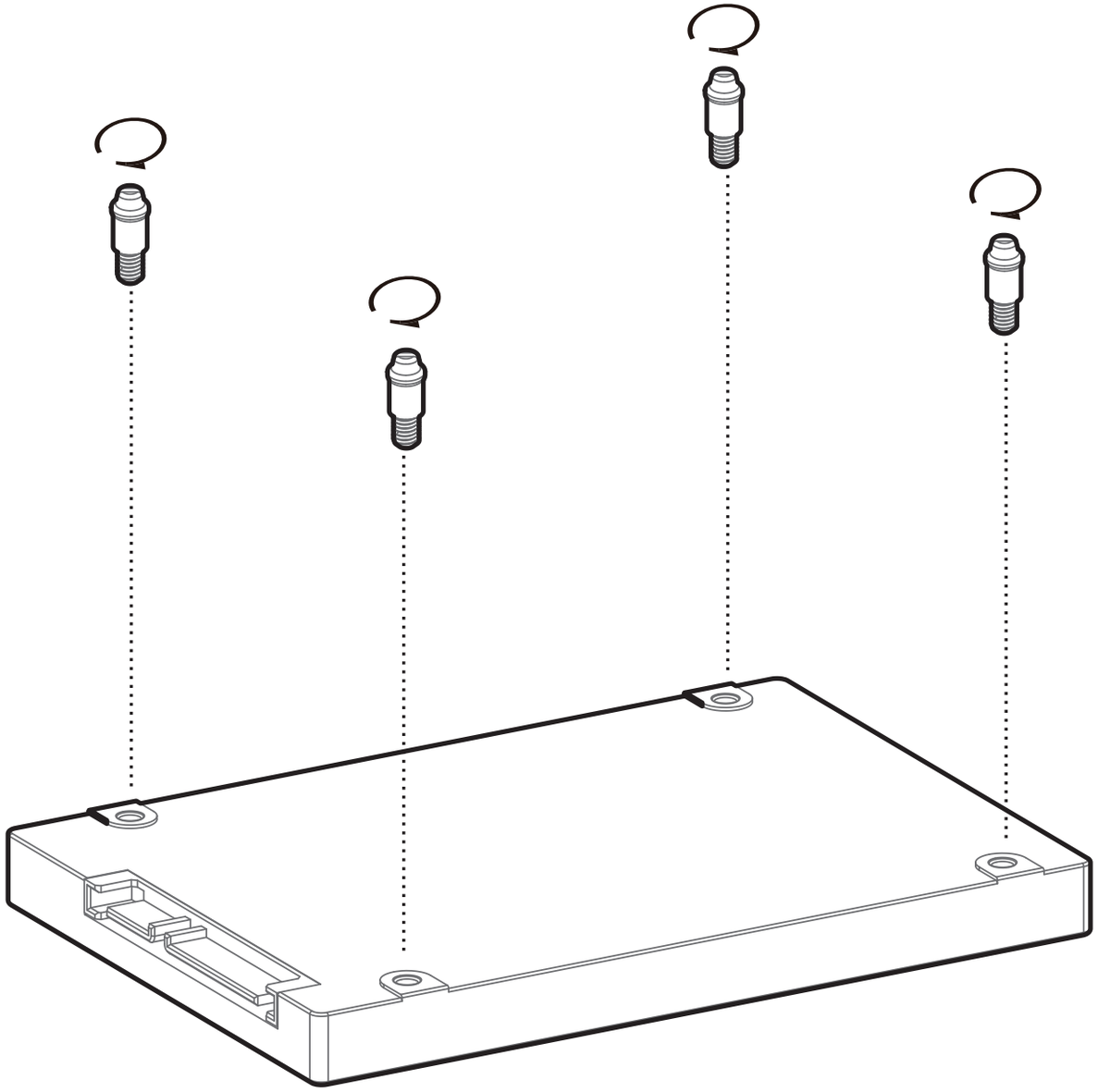

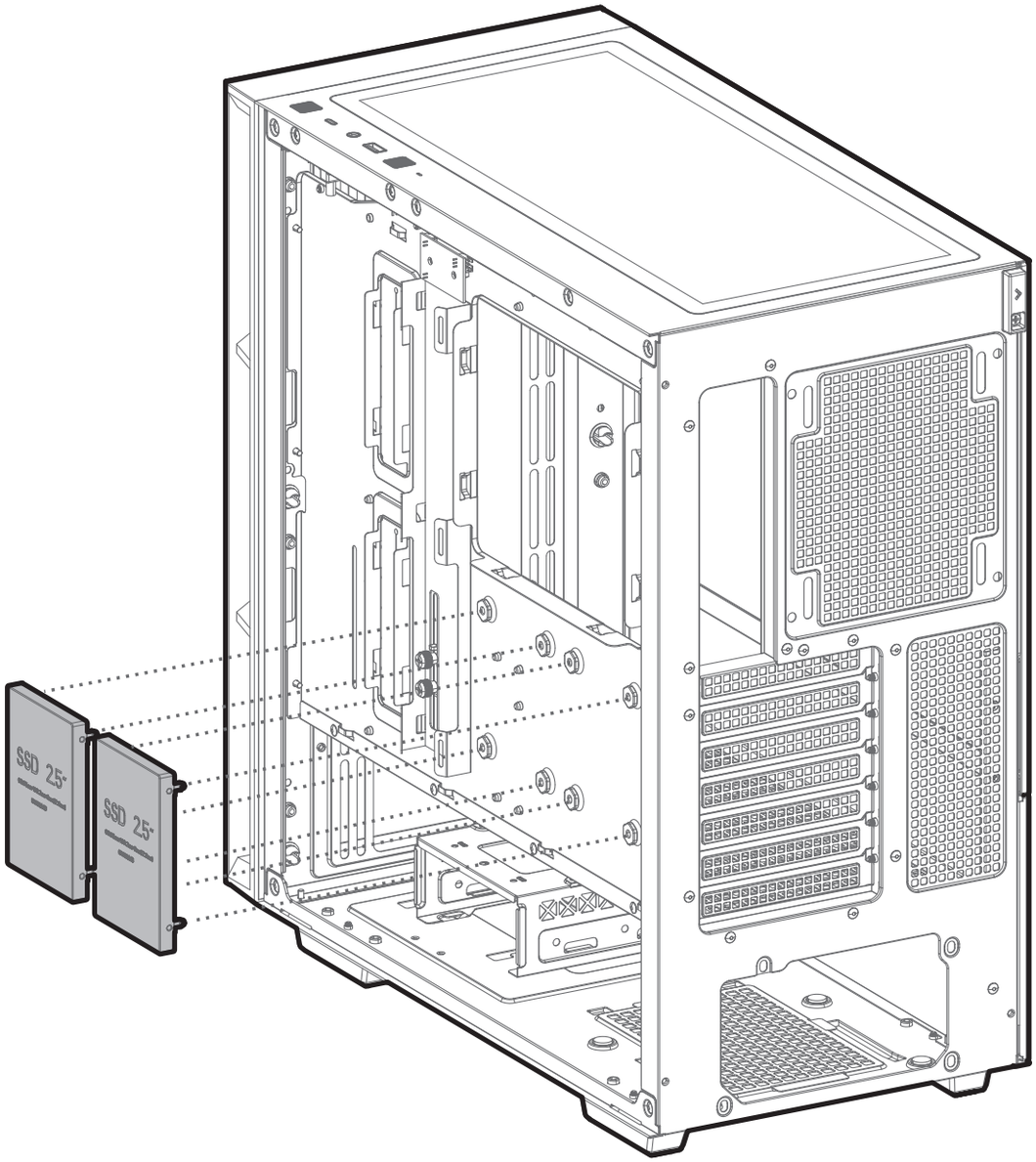
SSD 2.5"
SSD 2.5"

Installing the Power Supply

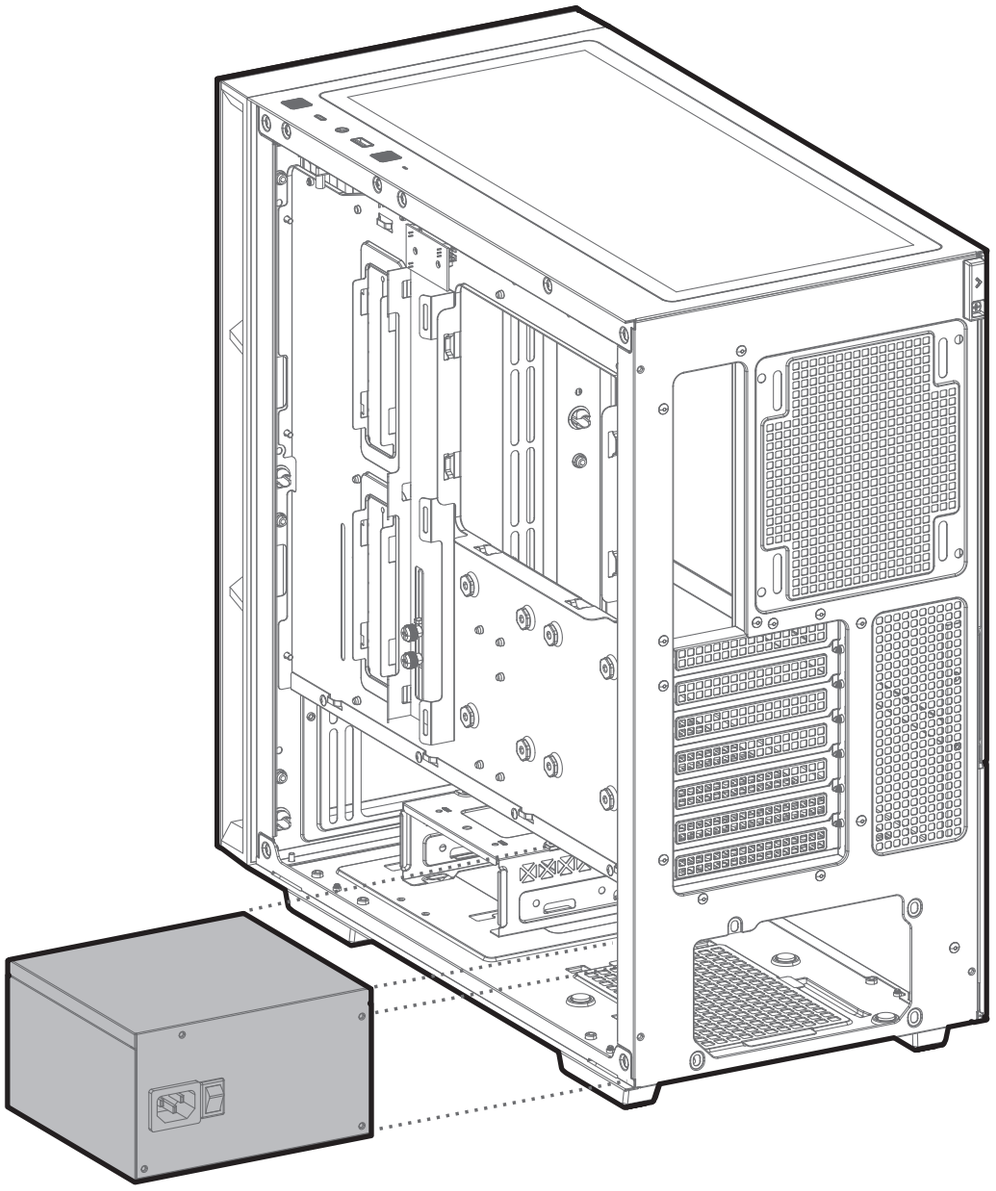

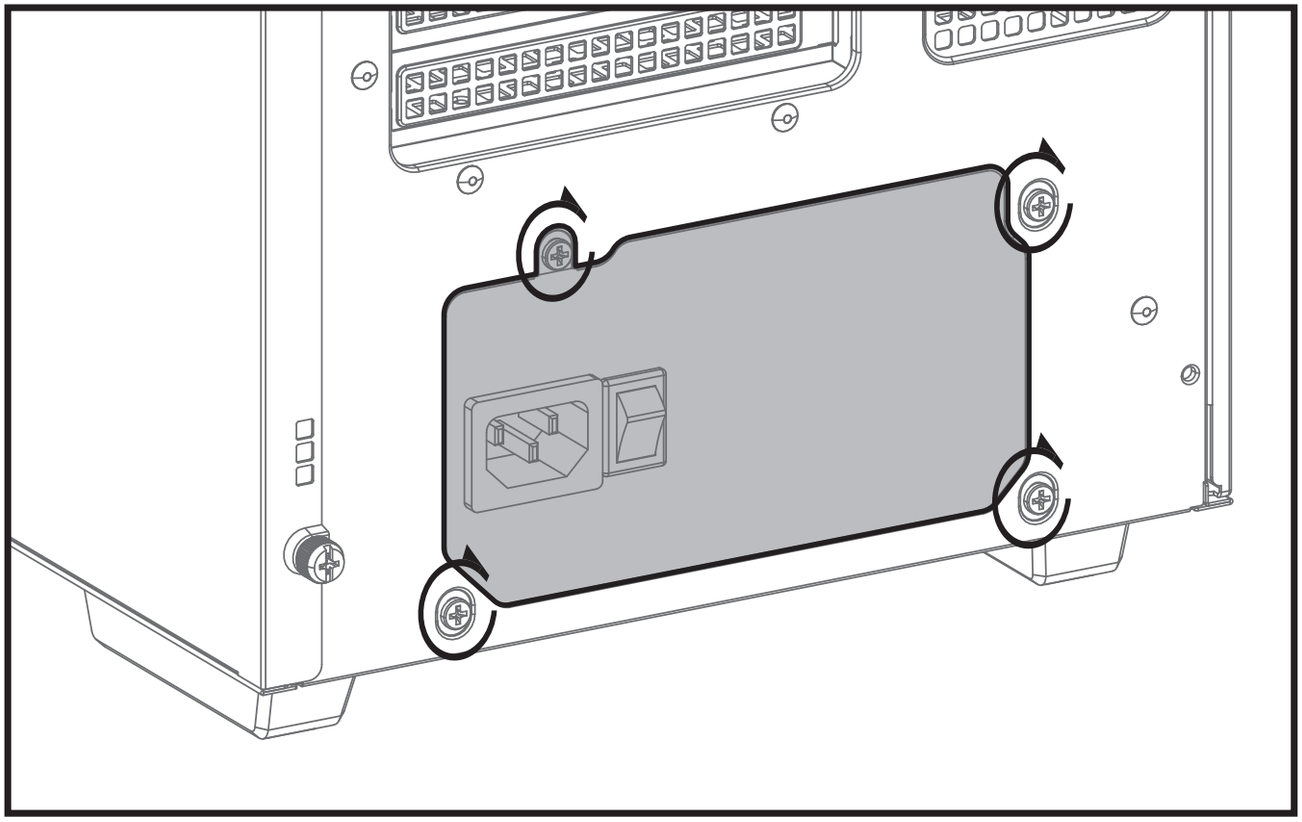

I/O Panel Introduction

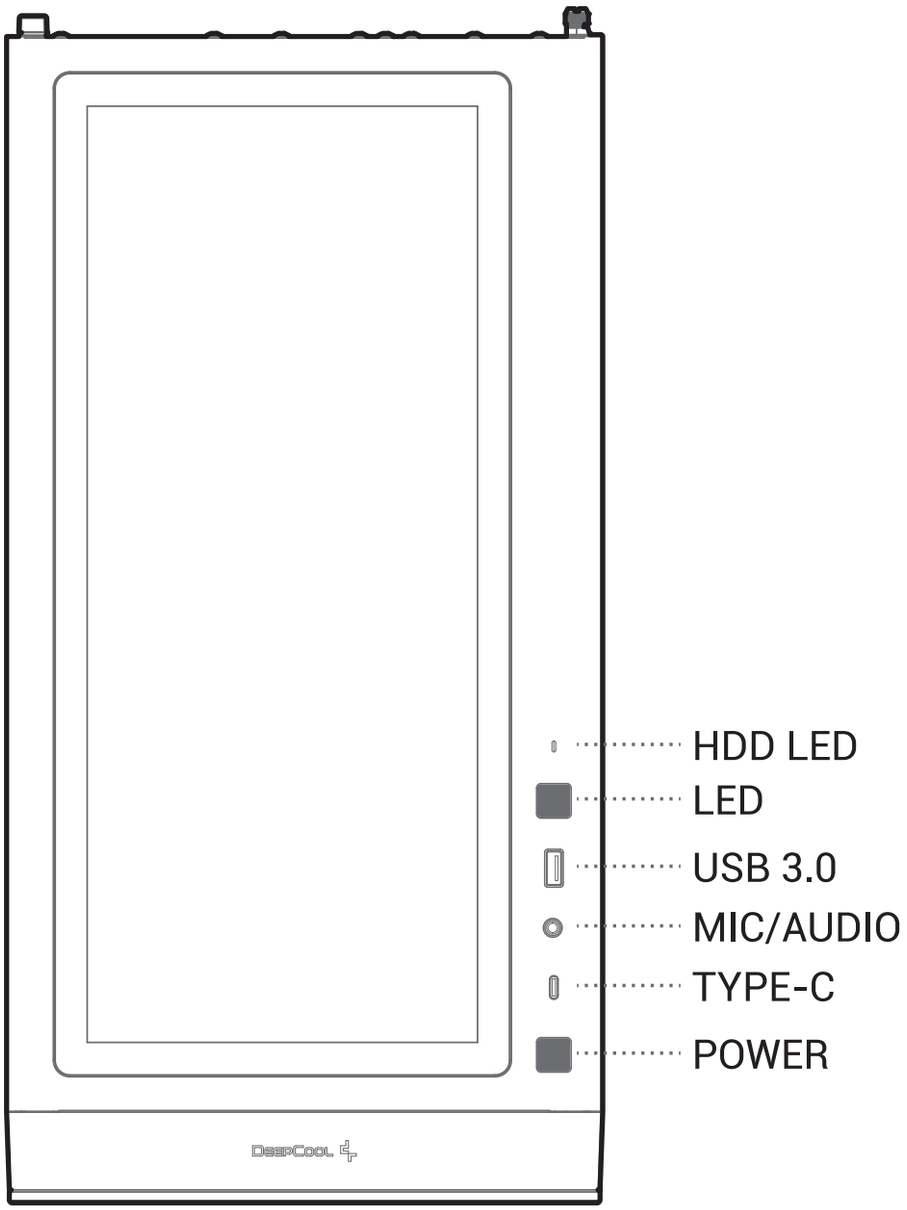

Installing the Front I/O Connectors

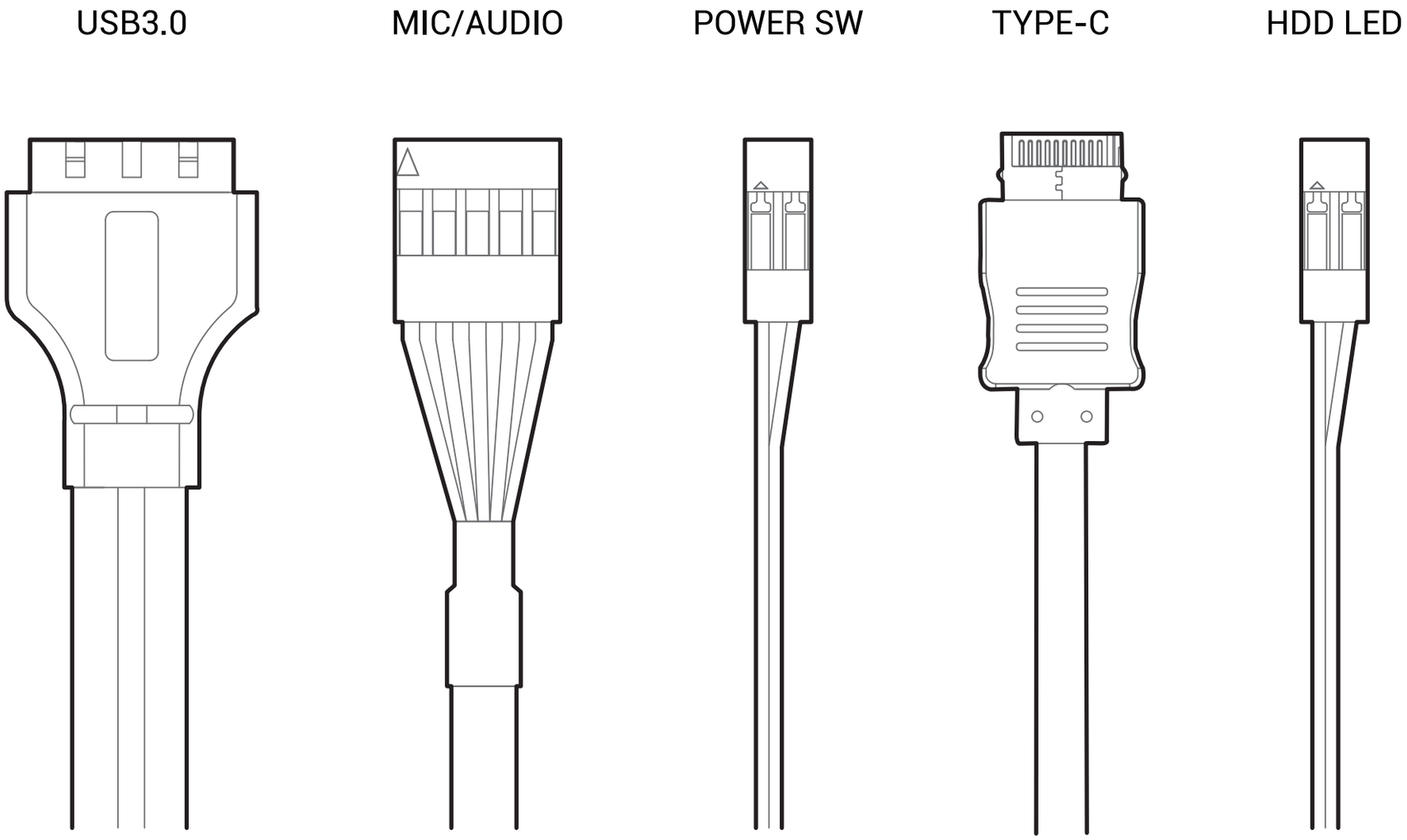

For reference only, please refer to the real product.

Manual RGB Wiring

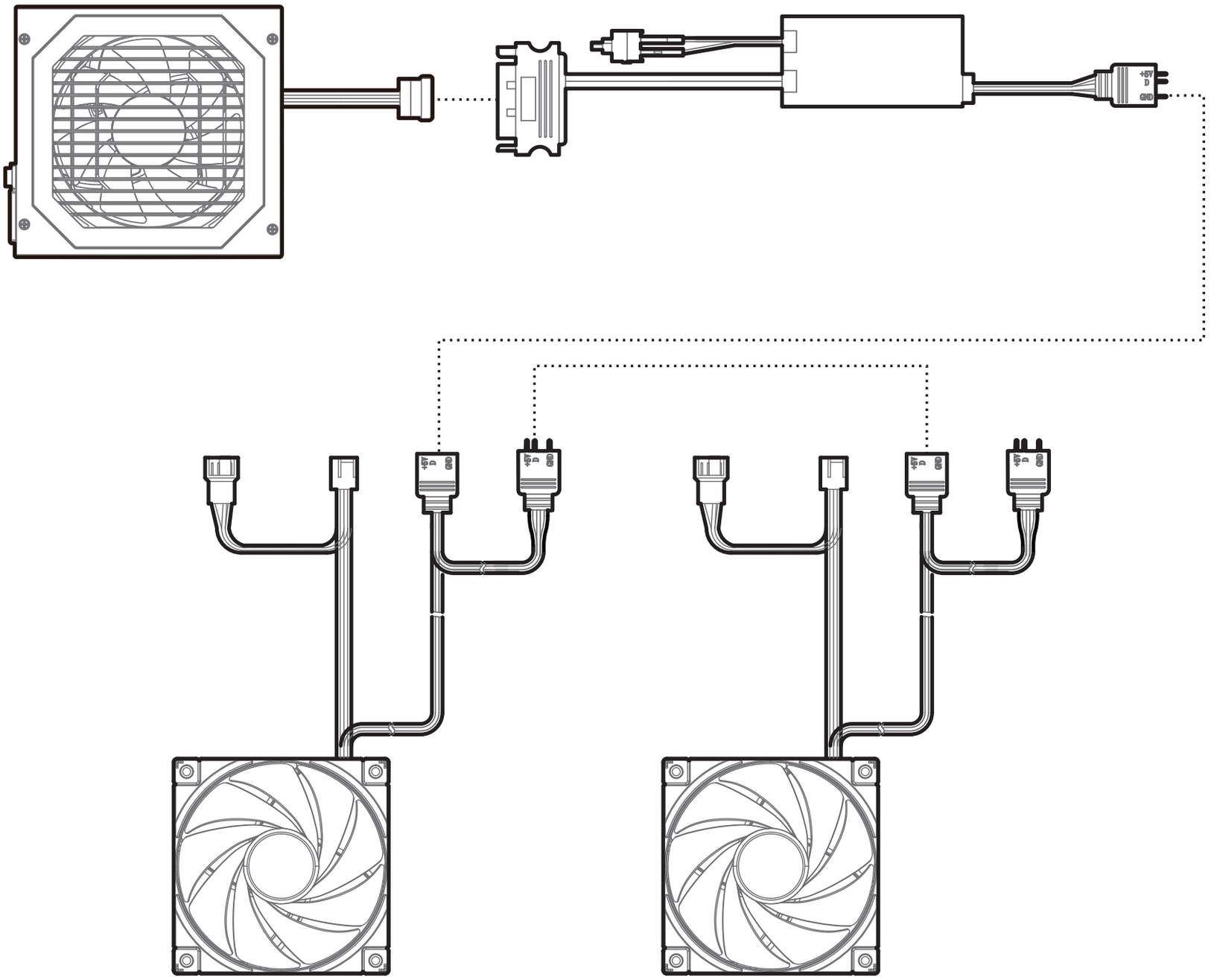

For reference only, please refer to the real product.

Motherboard RGB Synchronization

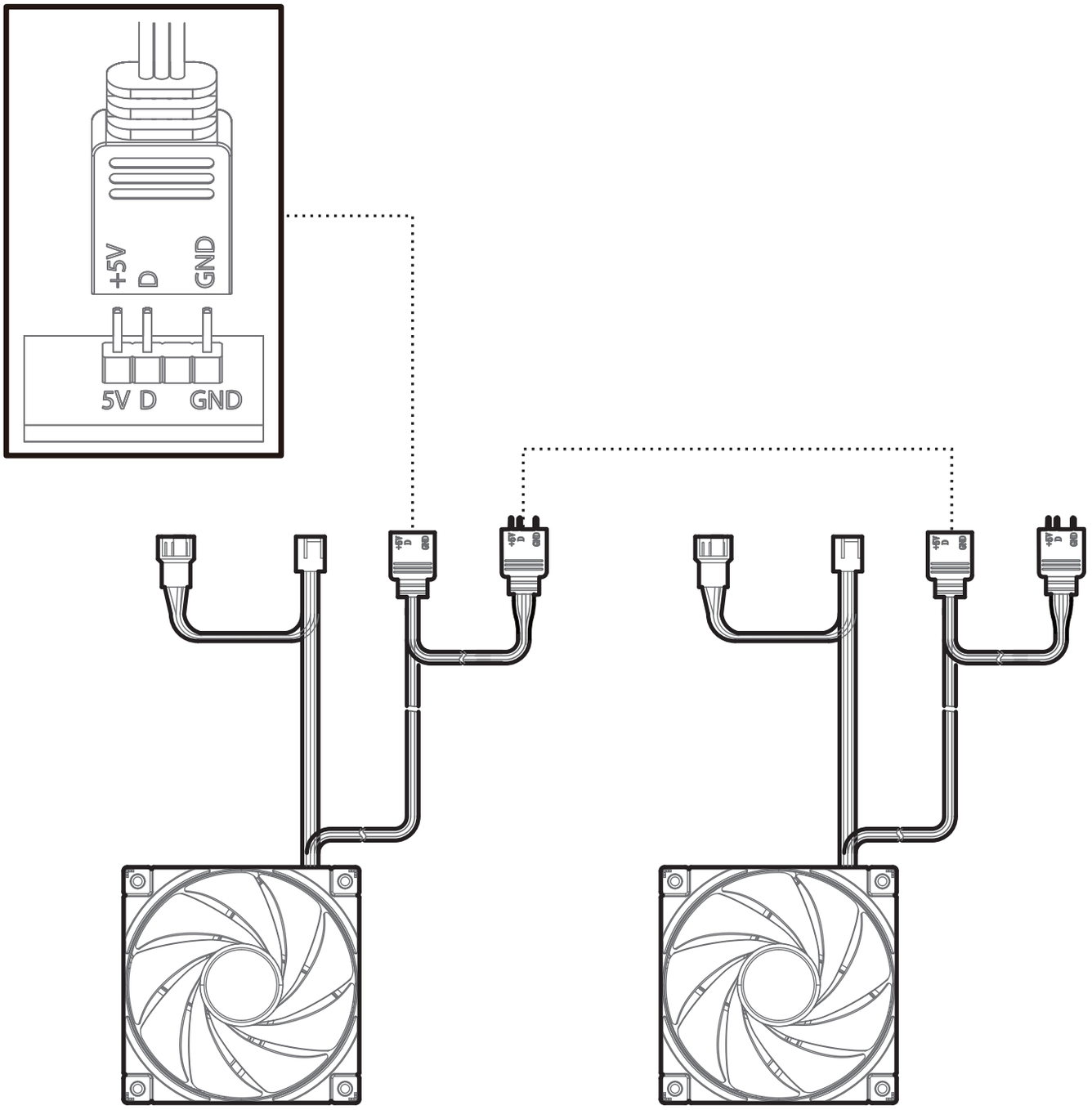

For reference only, please refer to the real product.

Fan Power Line Wiring

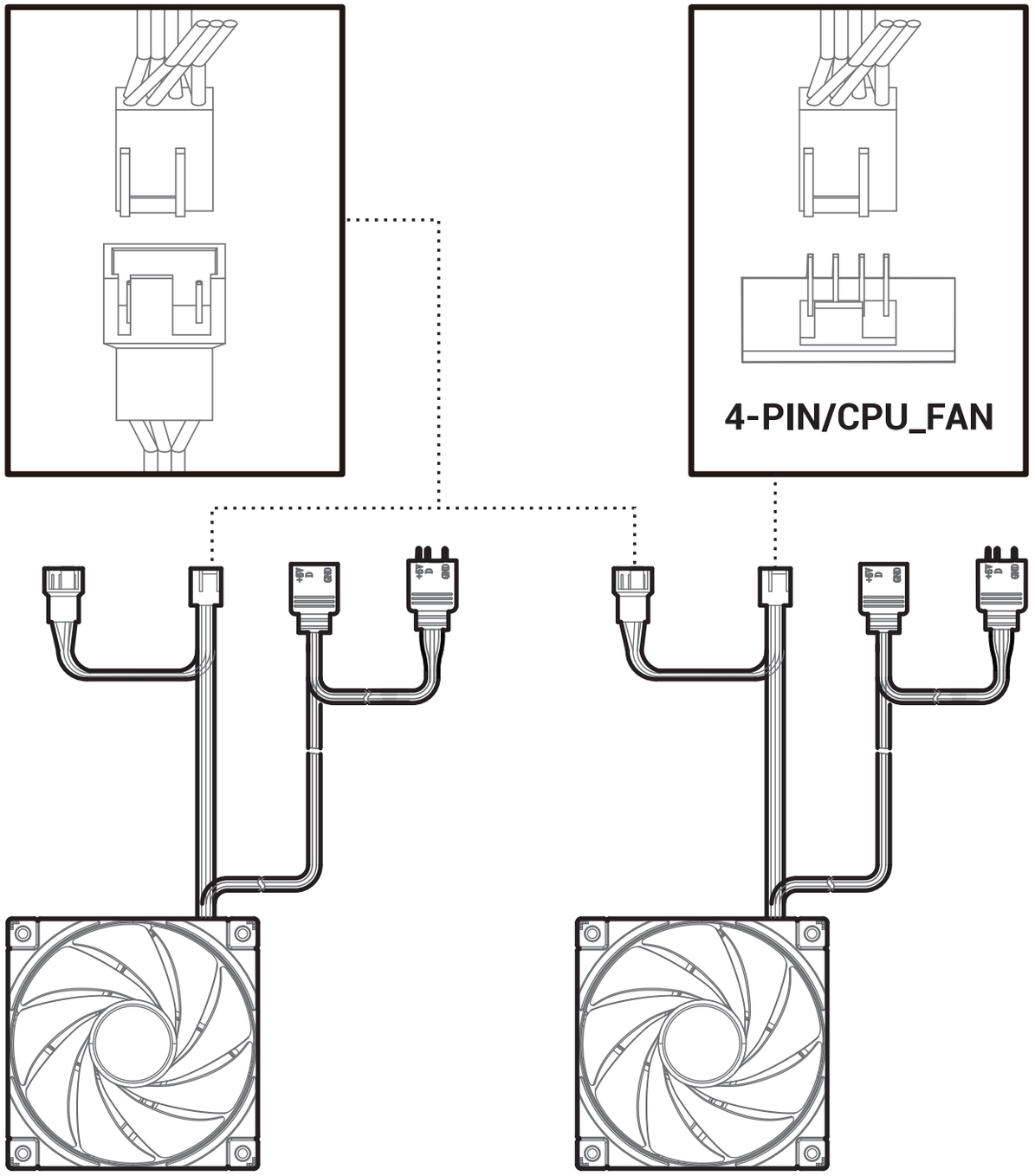

For reference only, please refer to the real product.

部件名称	有毒有害物质或元素					
	铅 (Pb)	汞 (Hg)	镉 (Cd)	六价铬 (Cr+6)	多溴联苯 (PBB)	多溴二苯醚 (PBDE)
机壳	○	○	○	○	○	○
塑胶	○	○	○	○	○	○
螺丝	○	○	○	○	○	○
集成电路	○	○	○	○	○	○
零件包	○	○	○	○	○	○

本表格依据SJ/T 11364的规定编制。
环保使用期限标识表示产品在正常工作温度和湿度等条件下的环保使用年限为10年。
○:表示该有害物质在该部件所有均质材料中的含量均在GB/T 26572规定的限量要求以下。
×:表示该有害物质至少在该部件的某一均质材料中的含量超出GB/T 26572规定的限量要求，
且因技术发展水平限制而无成熟方案替代，均符合欧盟RoHS法规环保指令。

BEIJING JZFS SCI-TECH CO., LTD.
No.101, Floor 1-4, Building 10,Dijin Road 9, Haidian Dist., Beijing,China
© 2024 BEIJING JZFS SCI-TECH CO., LTD. All rights reserved.
"DeepCool ™"and other commercial identities are legitimate registered trademarks and commercial identities of the trademarks owner and its affiliates in China and other countries or regions.
Pictures on this package are for reference only, please refer to the actual product.

EN For more information, please check our website at: www.deepcool.com

DE Für weitere Informationen besuchen Sie bitte unsere Website unter: www.deepcool.com

FR Pour plus d'informations, merci de visiter notre site internet: www.deepcool.com

ES Para más información, por favor,visite nuestra página en: www.deepcool.com

IT Per ulteriori informazioni, visitate il nostro sito web: www.deepcool.com

PT Para mais informação, visita o nosso website em: www.deepcool.com

CS Další informace najdete na našich webových stránkách: www.deepcool.com

SV För mer information, gå till vår hemsida på: www.deepcool.com

PL Więcej informacji można znaleźć na naszej stronie internetowej: www.deepcool.com

TR Daha Fazla bilgi için, lütfen websitemizi ziyaret ediniz: www.deepcool.com

RU Больше информации на сайте: www.deepcool.com

UK Щоб отримати додаткову інформацію, перегляньте наш веб-сайт: www.deepcool.com

KK Көбірек ақпарат алу үшін біздің вебсайтымызға кіріңіз: www.deepcool.com

JA 詳細については、以下URL先の公式WEBサイトをご確認ください: www.deepcool.com

KO 자세한 내용은 www.deepcool.com 에서 확인하실 수 있습니다

AR للمزيد من المعلومات , يرجى زيارة موقعنا على www.deepcool.com

TH สามารถดูข้อมูลเพิ่มเติมได้ที่เว็บไซต์: www.deepcool.com

VI Để biết thêm chi tiết, vui lòng kiểm tra tại website: www.deepcool.com

ZH 如需要更多信息，请浏览网站: www.deepcool.com

ZH 如需要更多信息，請瀏覽網站: www.deepcool.com