CC360 ARGB Series

M-ATX Airflow Case

DeepCool

Case Features

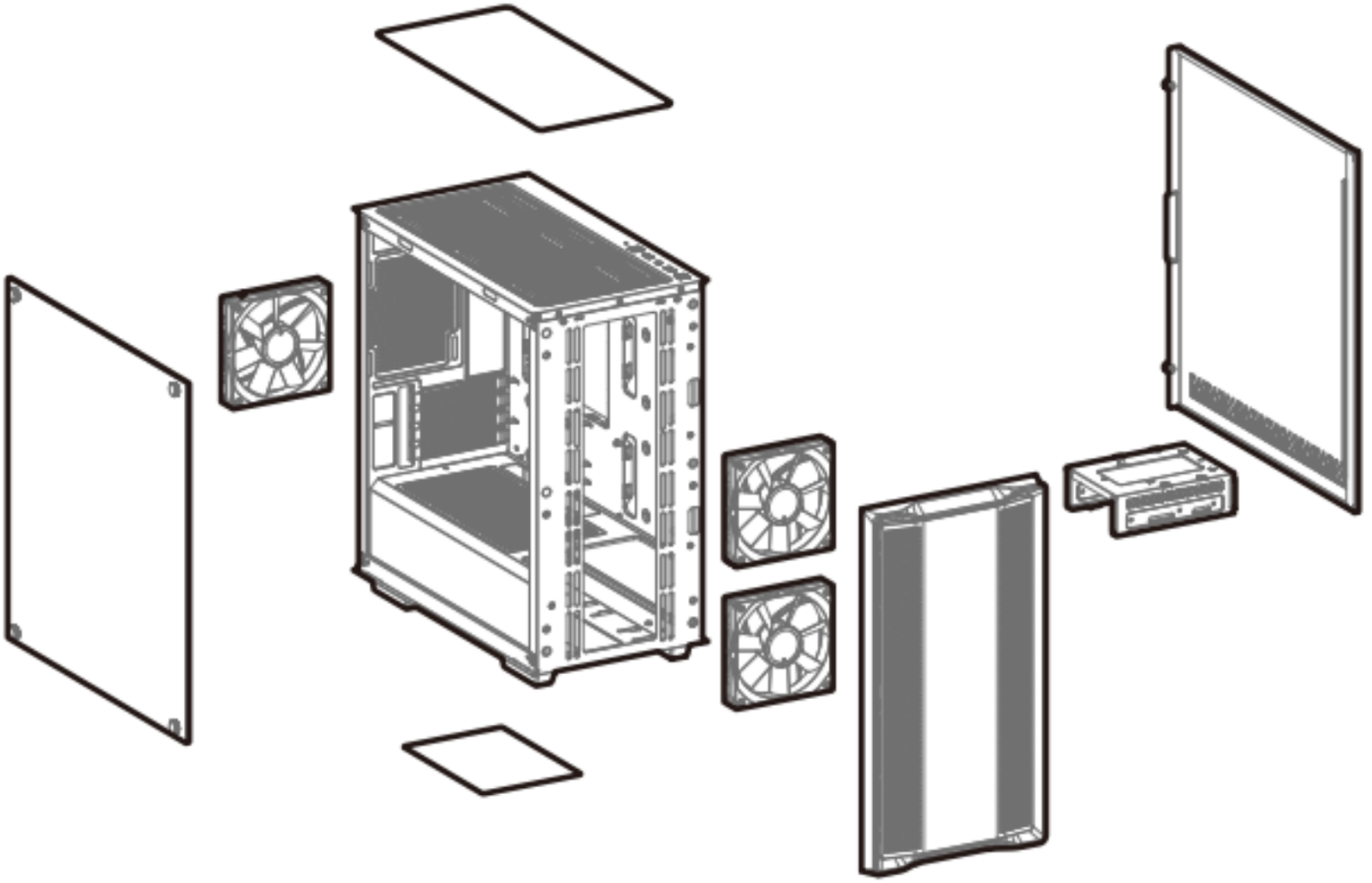

Case Specifications

Length:418mm
Width:215mm
Height:431mm

Maximum GPU length:320mm
Maximum PSU length:160mm
Maximum CPU Cooler length:165mm

Radiator compatibility:
Front: 120/140/240/280/360mm
Top: 120/140/240mm
Rear: 120mm

Fan locations:
Front: 3×120 / 2×140mm
Top: 2×120 / 2×140mm
Rear: 1×120mm
PSU Shrouded: 2×120mm

A

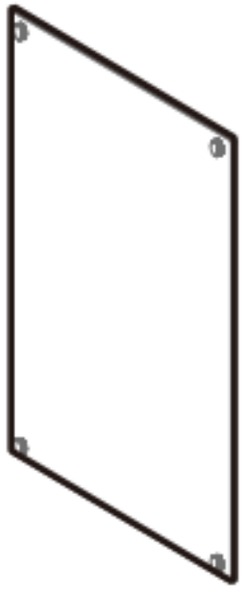

Tempered Glasss Panel ×1

B

Right Side Panel ×1

C

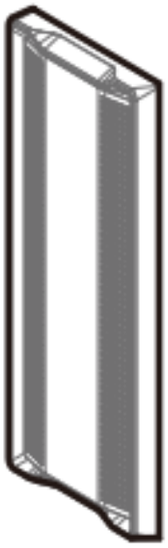

Front Panel ×1

D

Top Dust Filter ×1

E

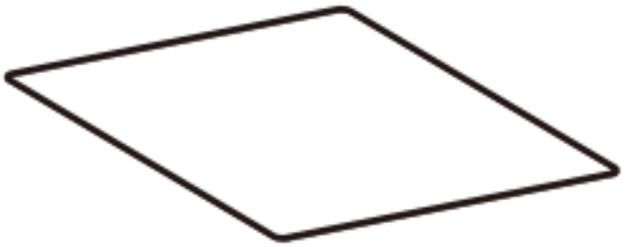

PSU Dust Filter ×1

F

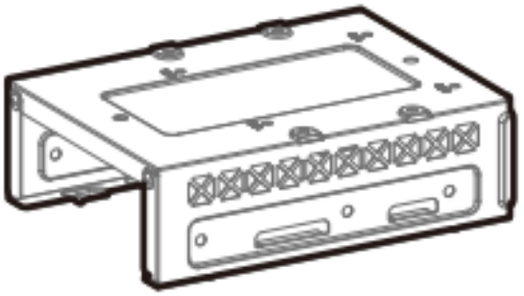

HDD Cage ×1

G

120mm ARGB Fans ×3

Accessory Kit Contents

H

PSU screws ×4

I

Motherboard screws ×18

J

SSD screws ×8

K

HDD screws ×8

L

Fan screws ×4

M

Power compartment Fan screw ×8

N

Cable ties ×11

Specifications

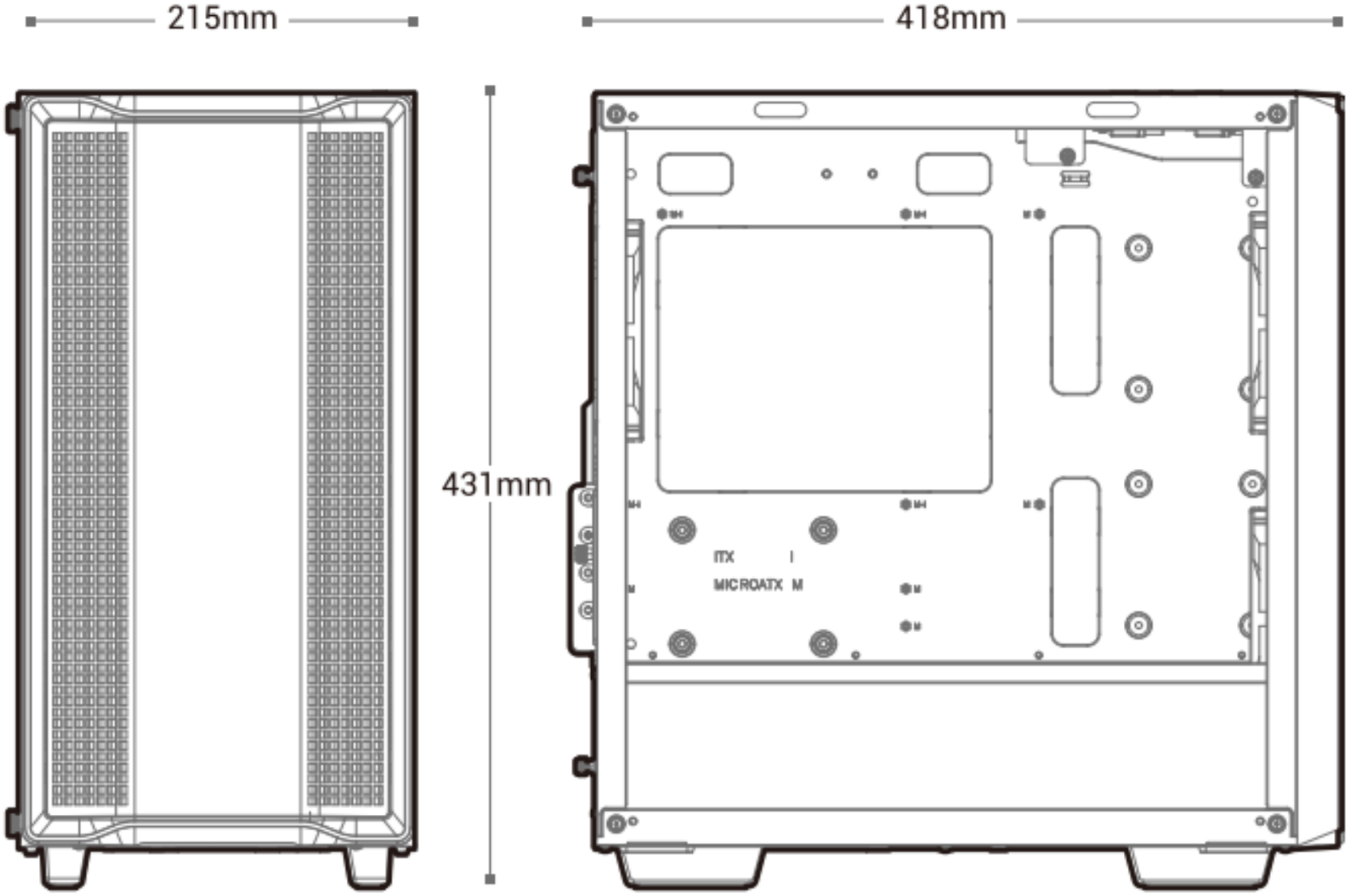

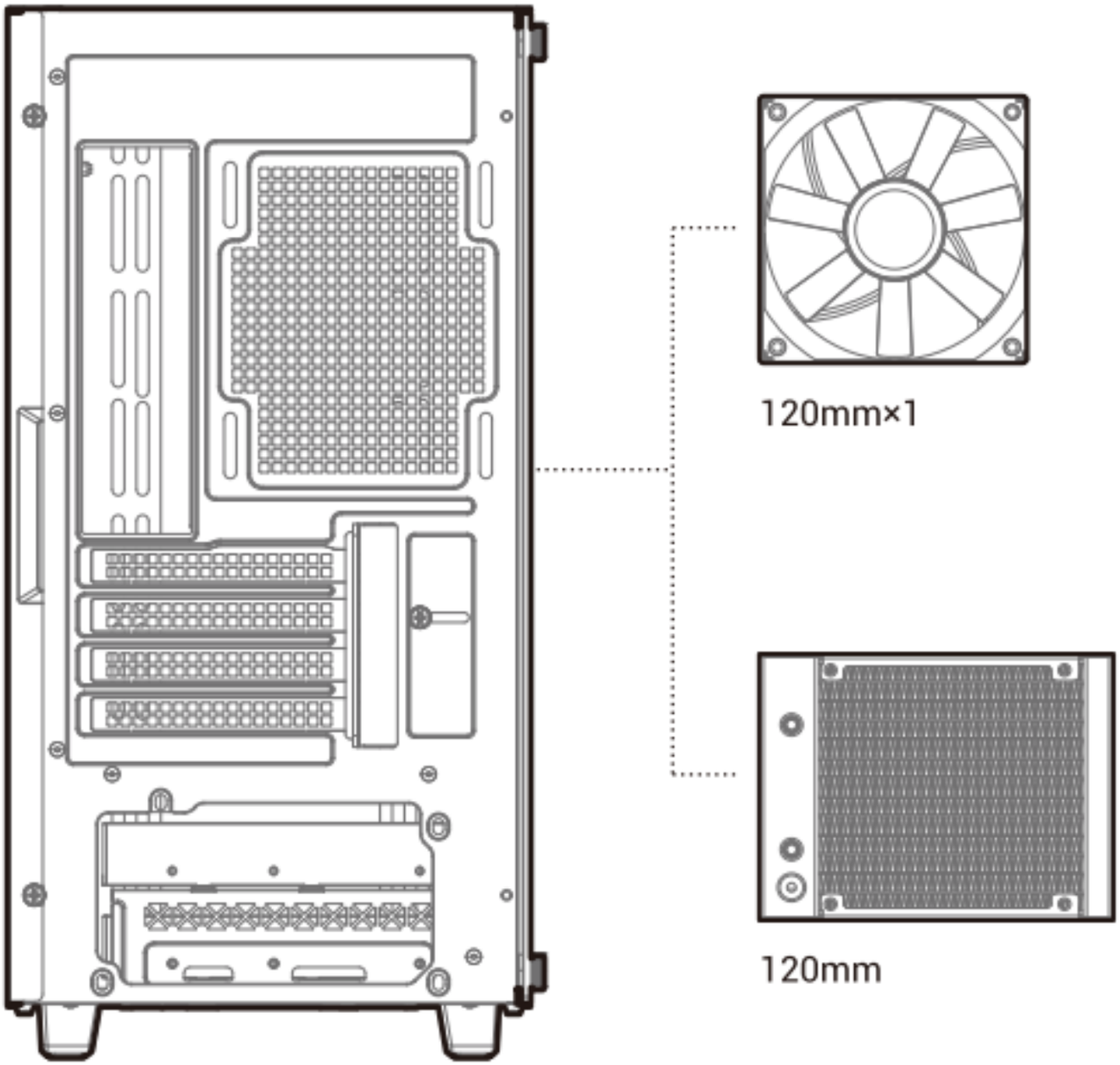
120mm×1
120mm

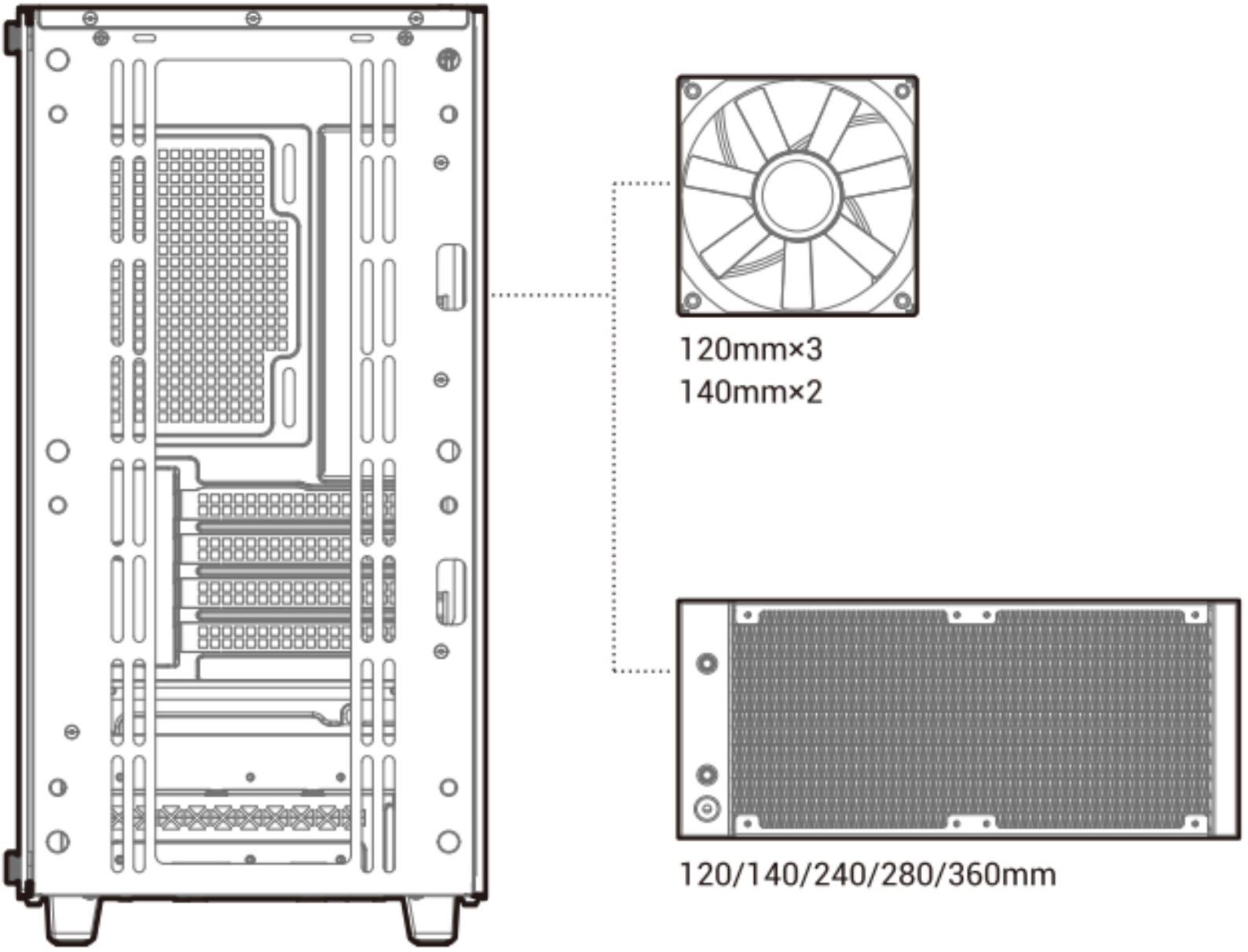
120mm×3
140mm×2
120/140/240/280/360mm

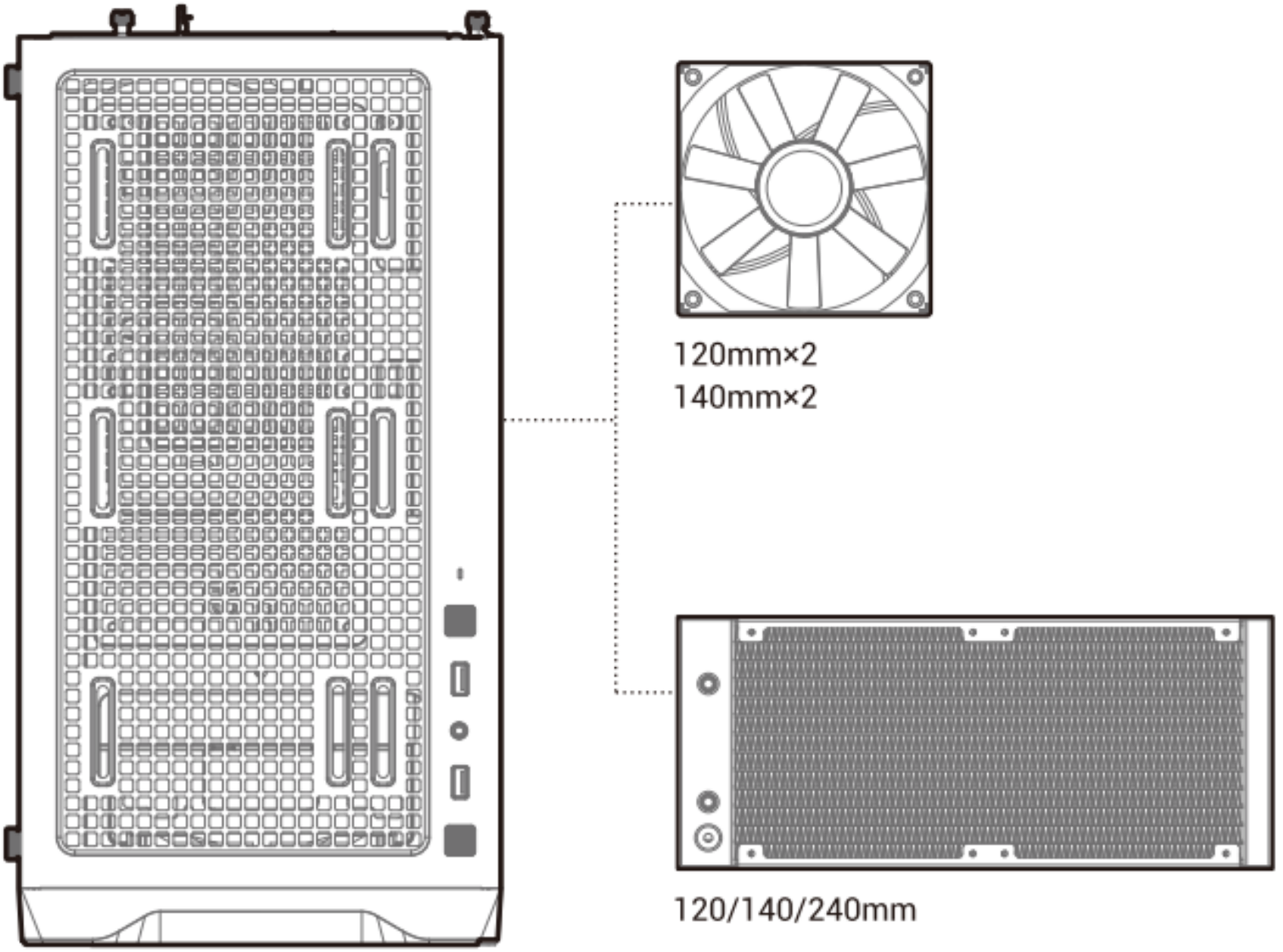
120mm×2
140mm×2
120/140/240mm

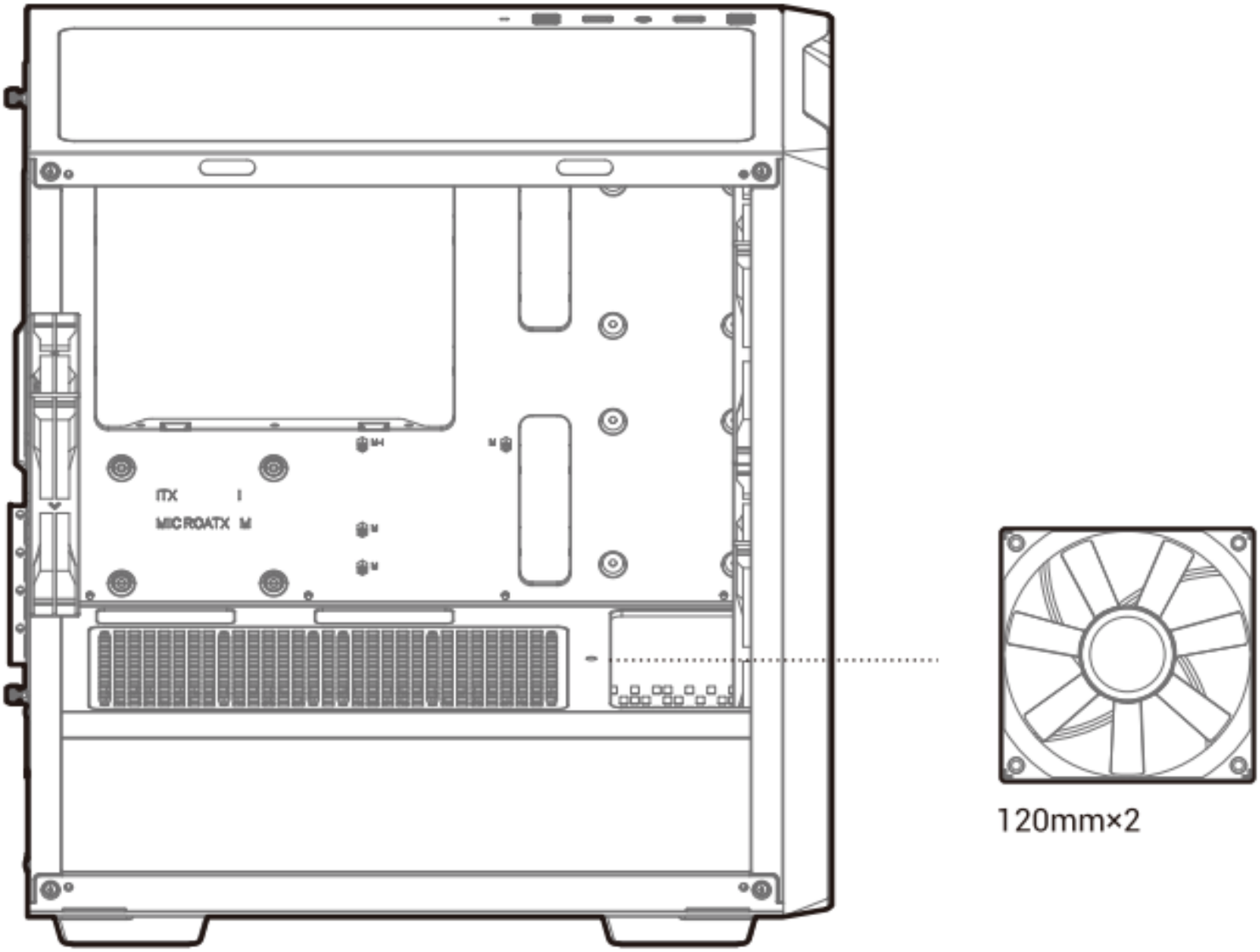
ITX
MICROATX
120mm×2

Removing the Tempered Glass Side Panel

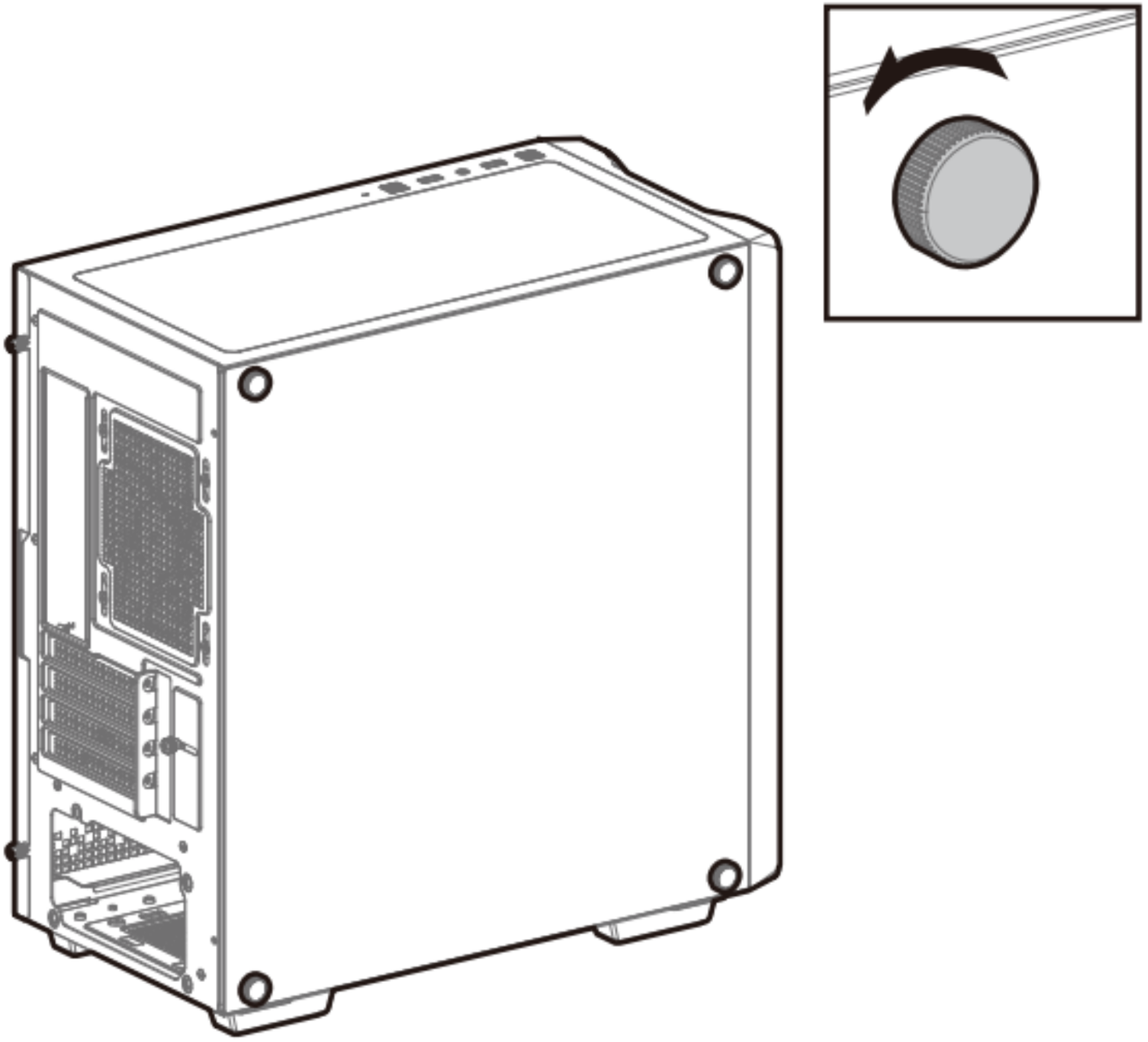

Removing the Metal Side Panel

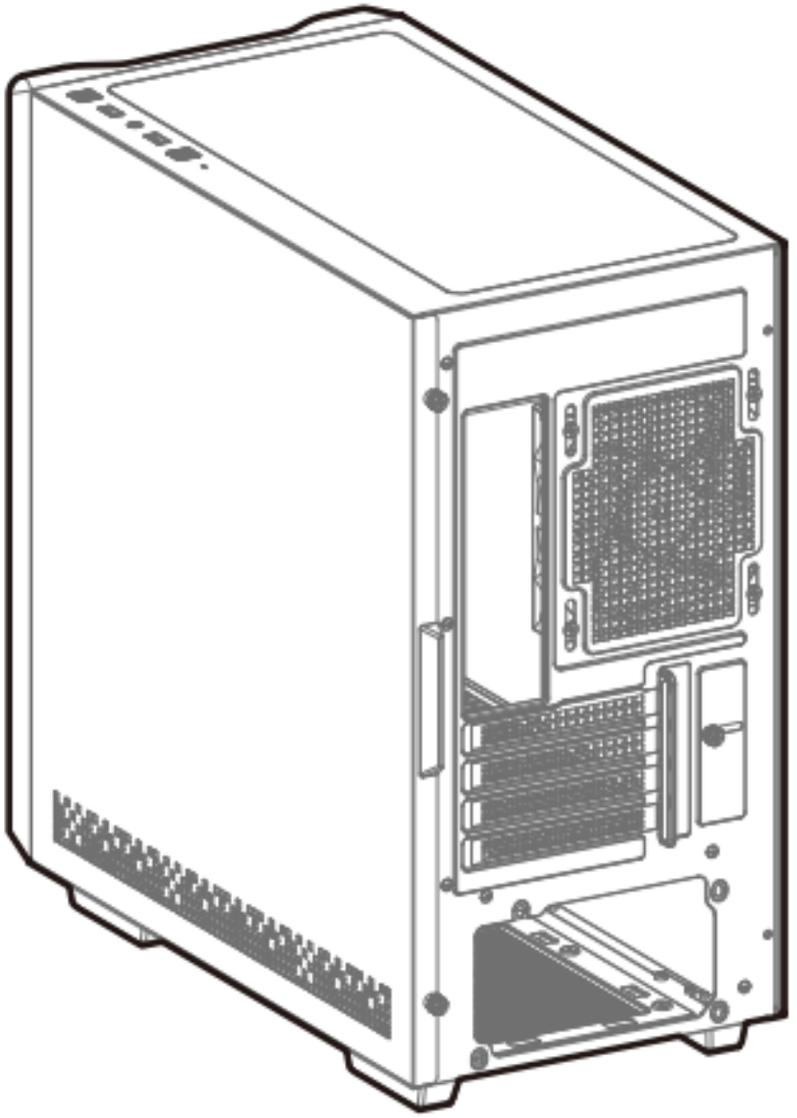

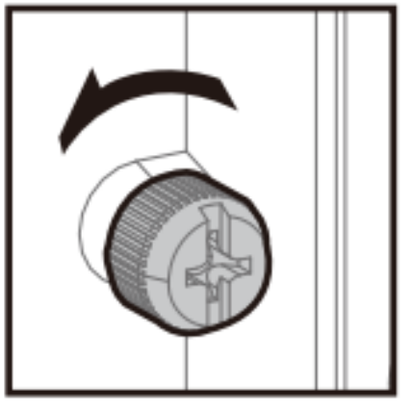

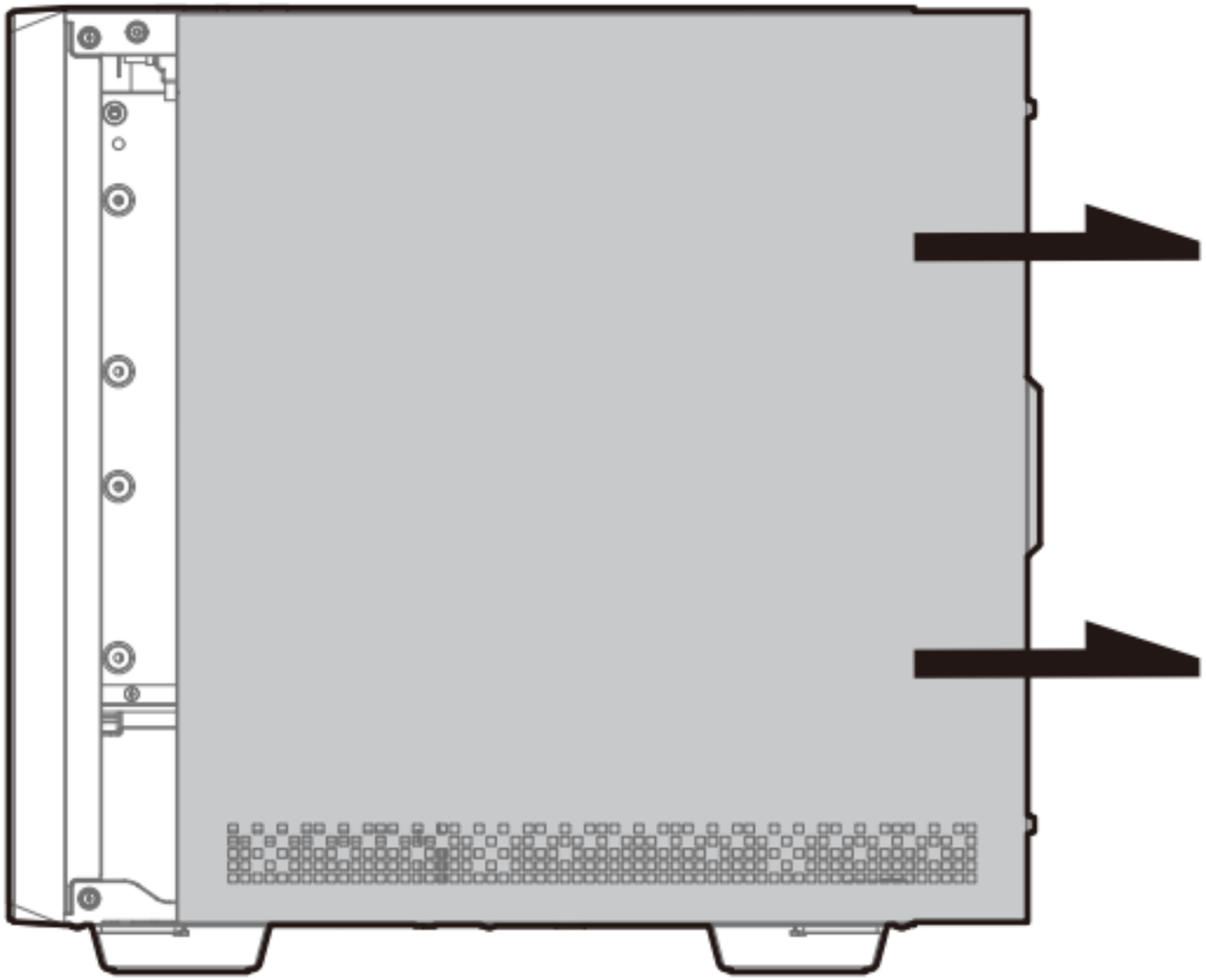

Removing the Front Panel

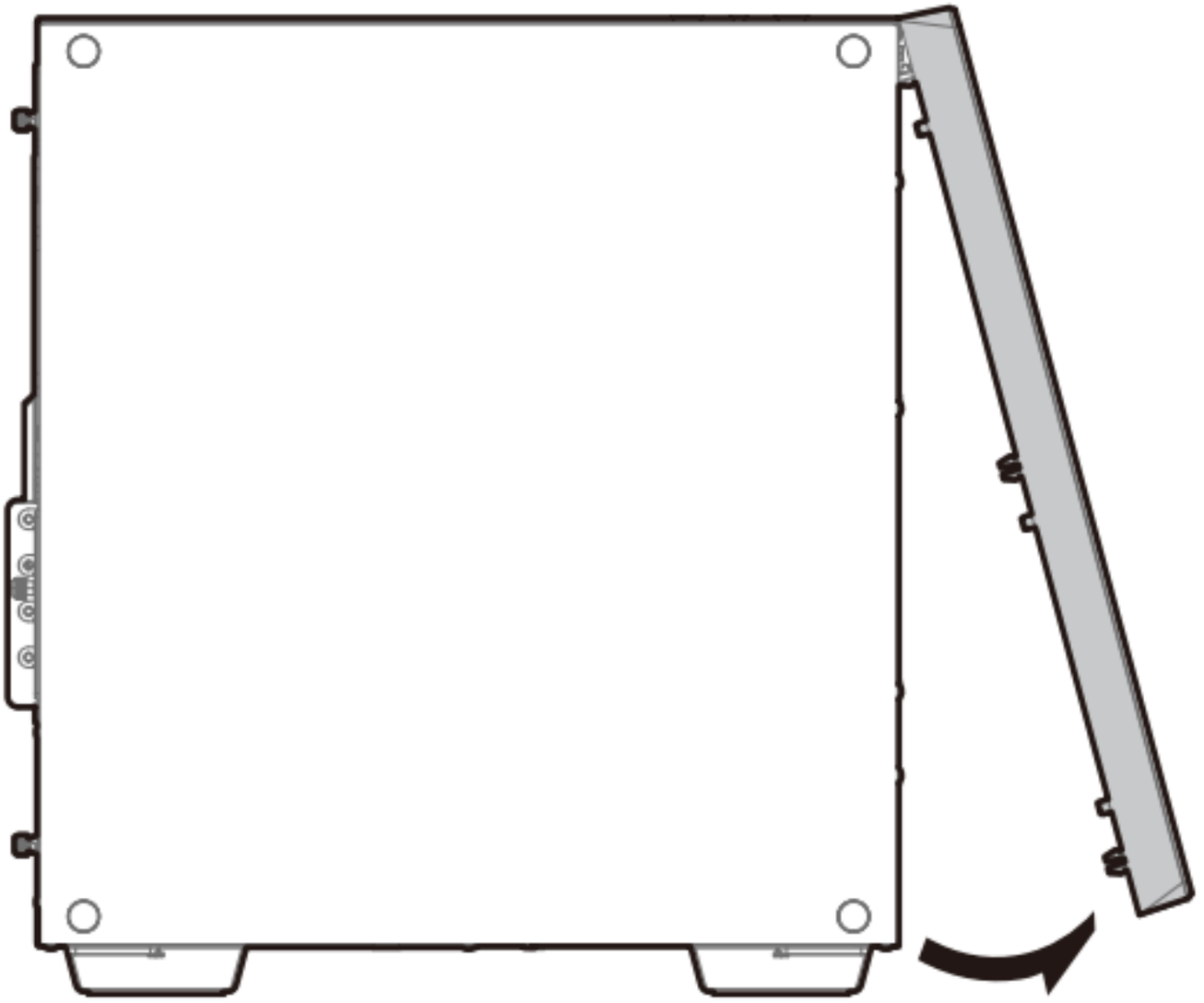

Installing the Motherboard

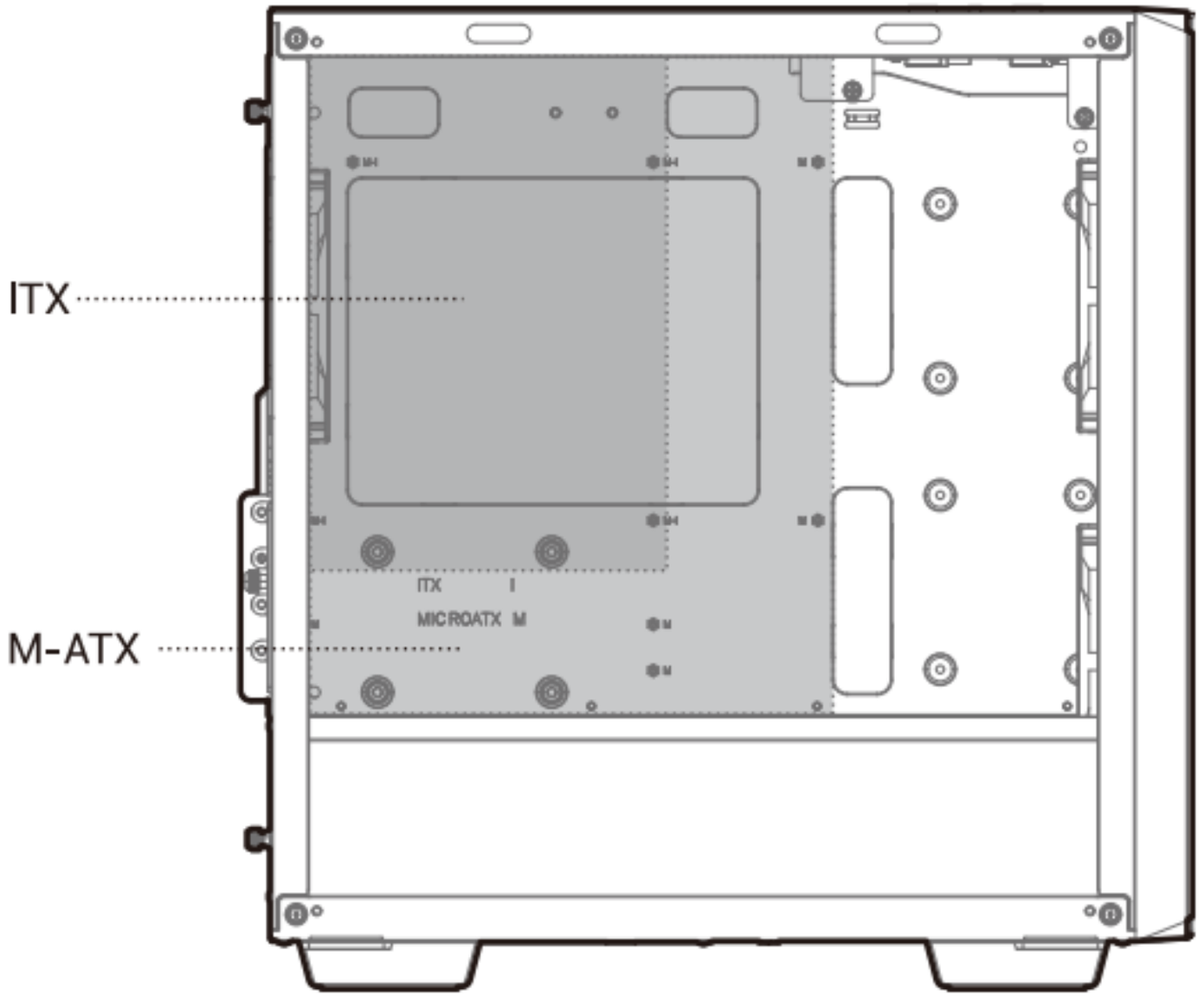

Installing the GPU

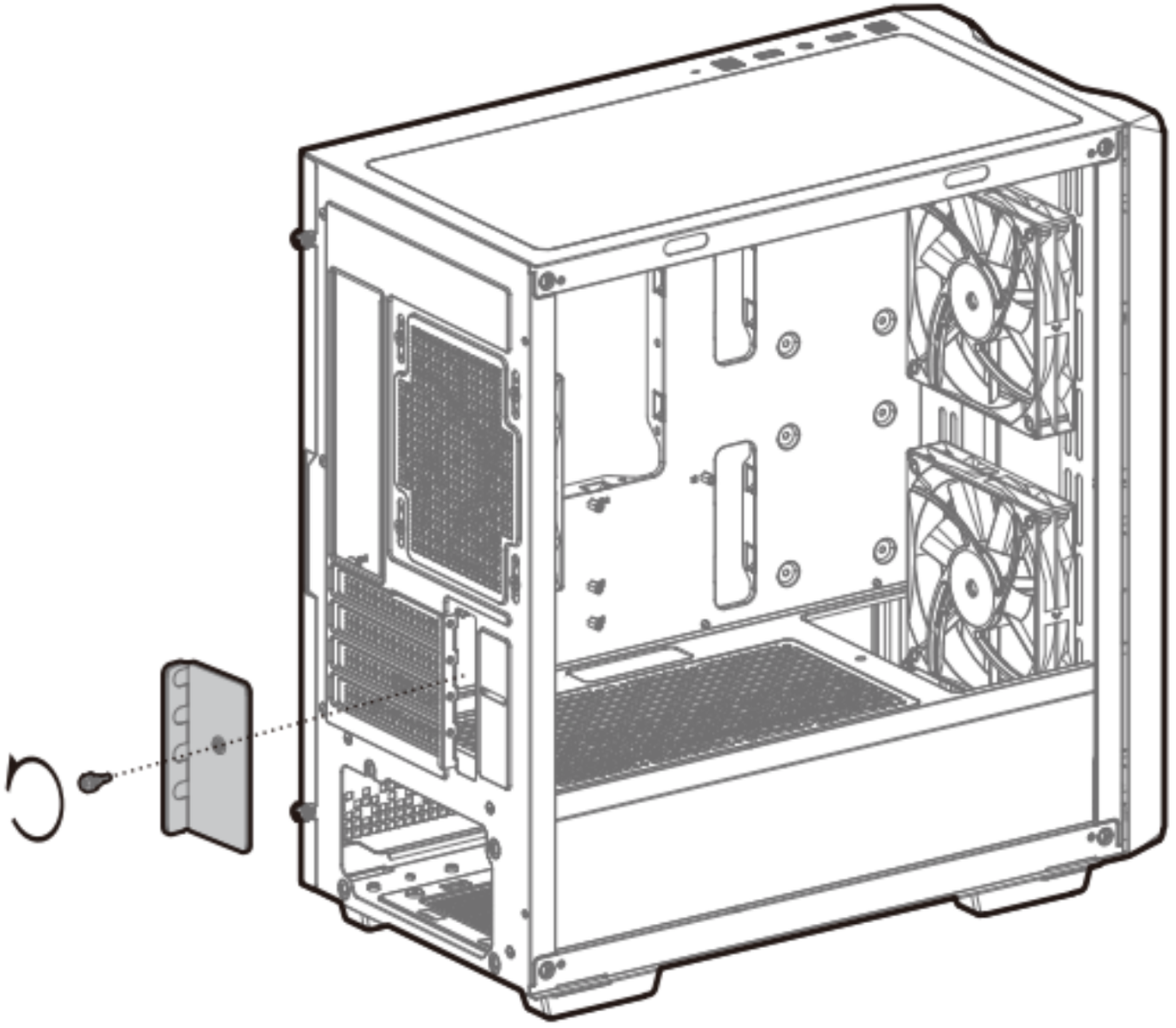

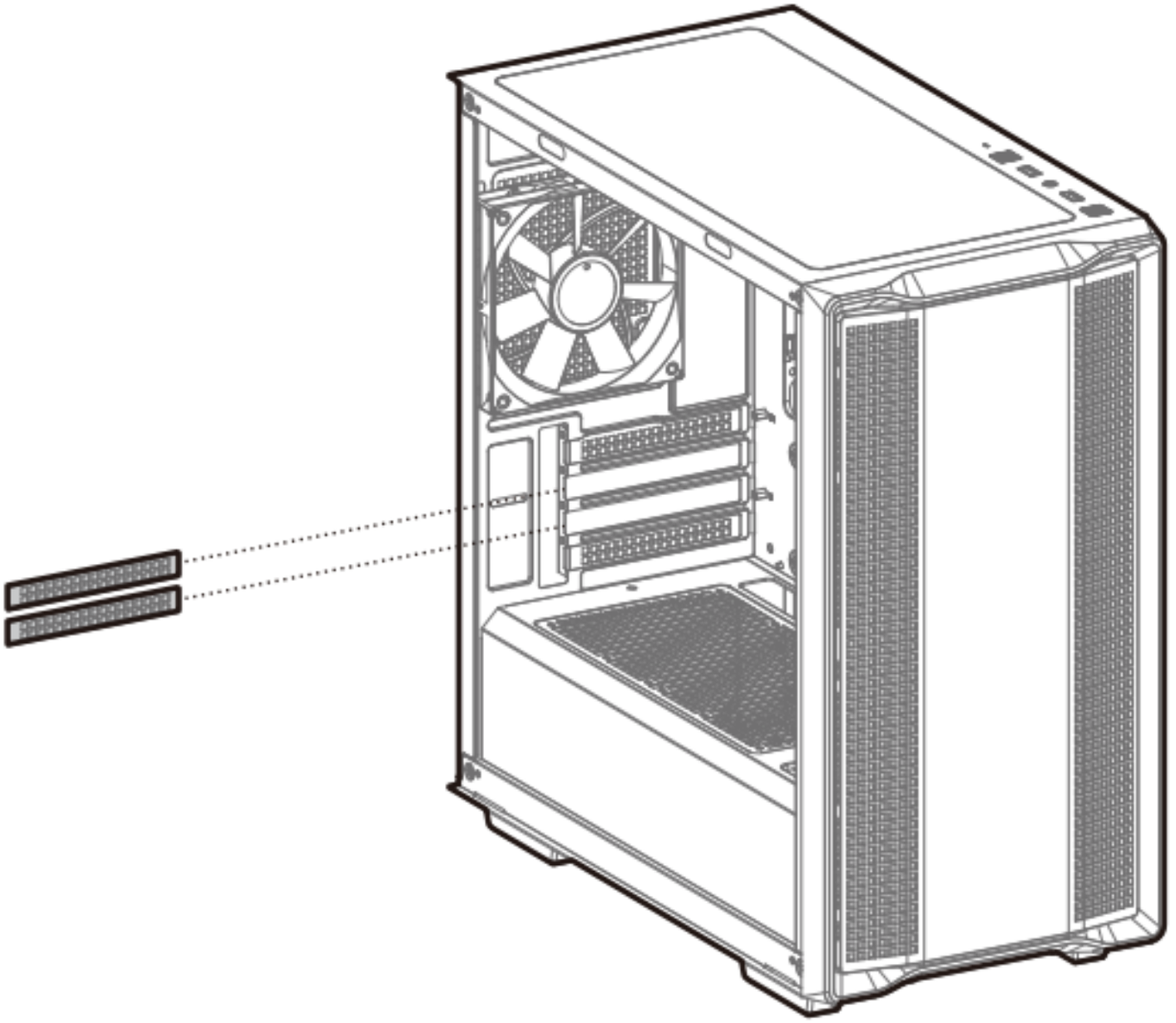

Installing HDDs

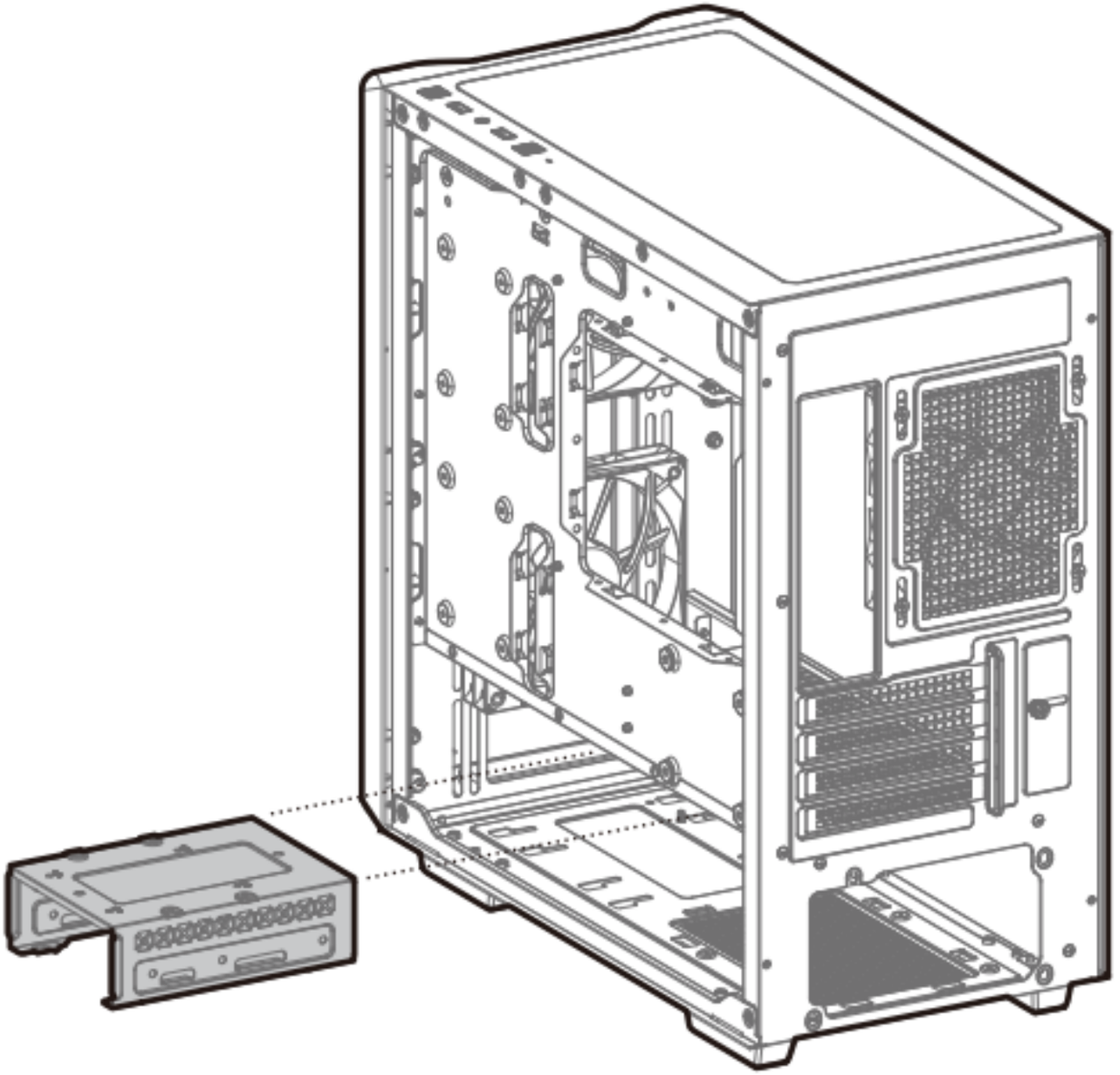

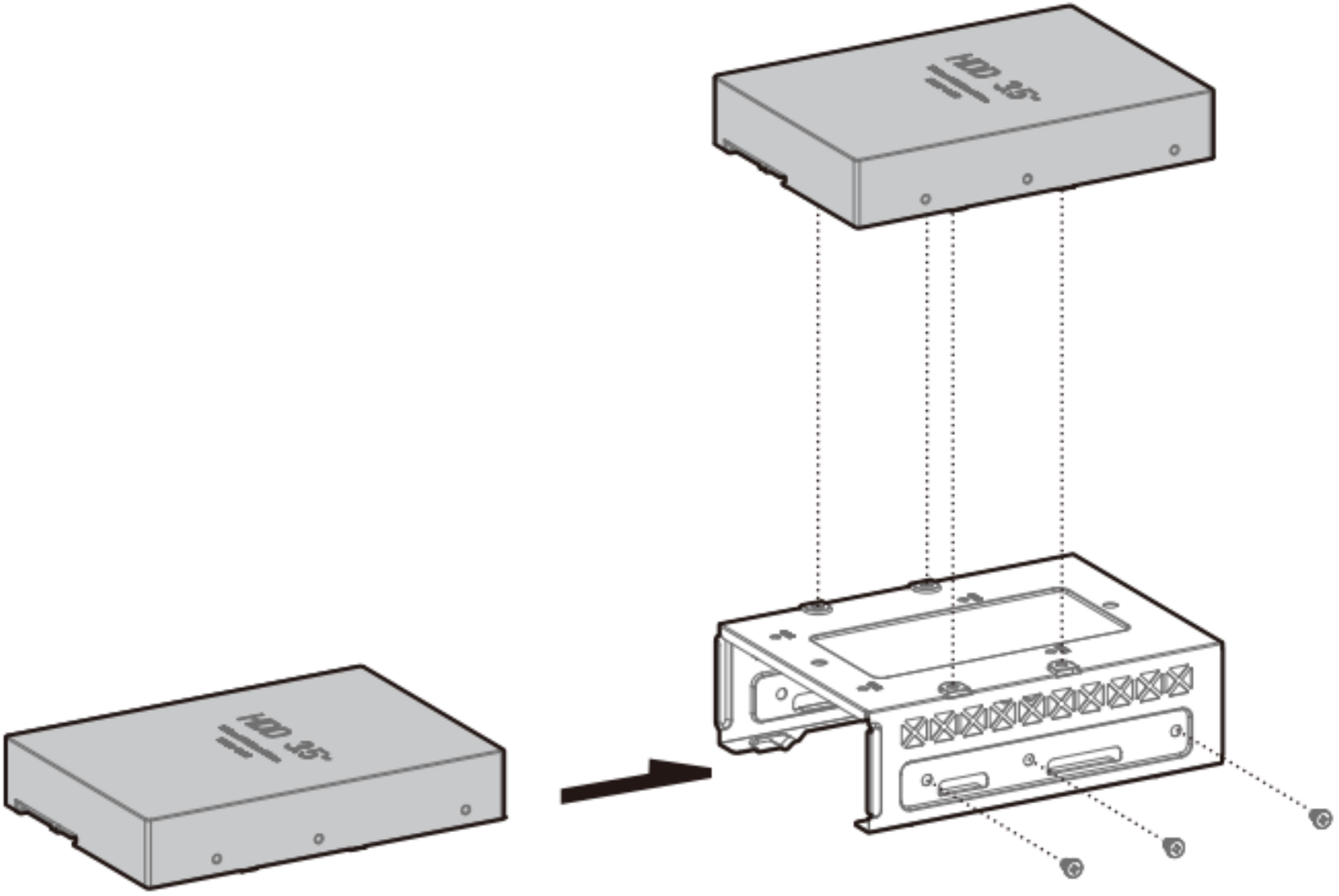
HDD 3.5"
HDD 3.5"

Installing SSDs

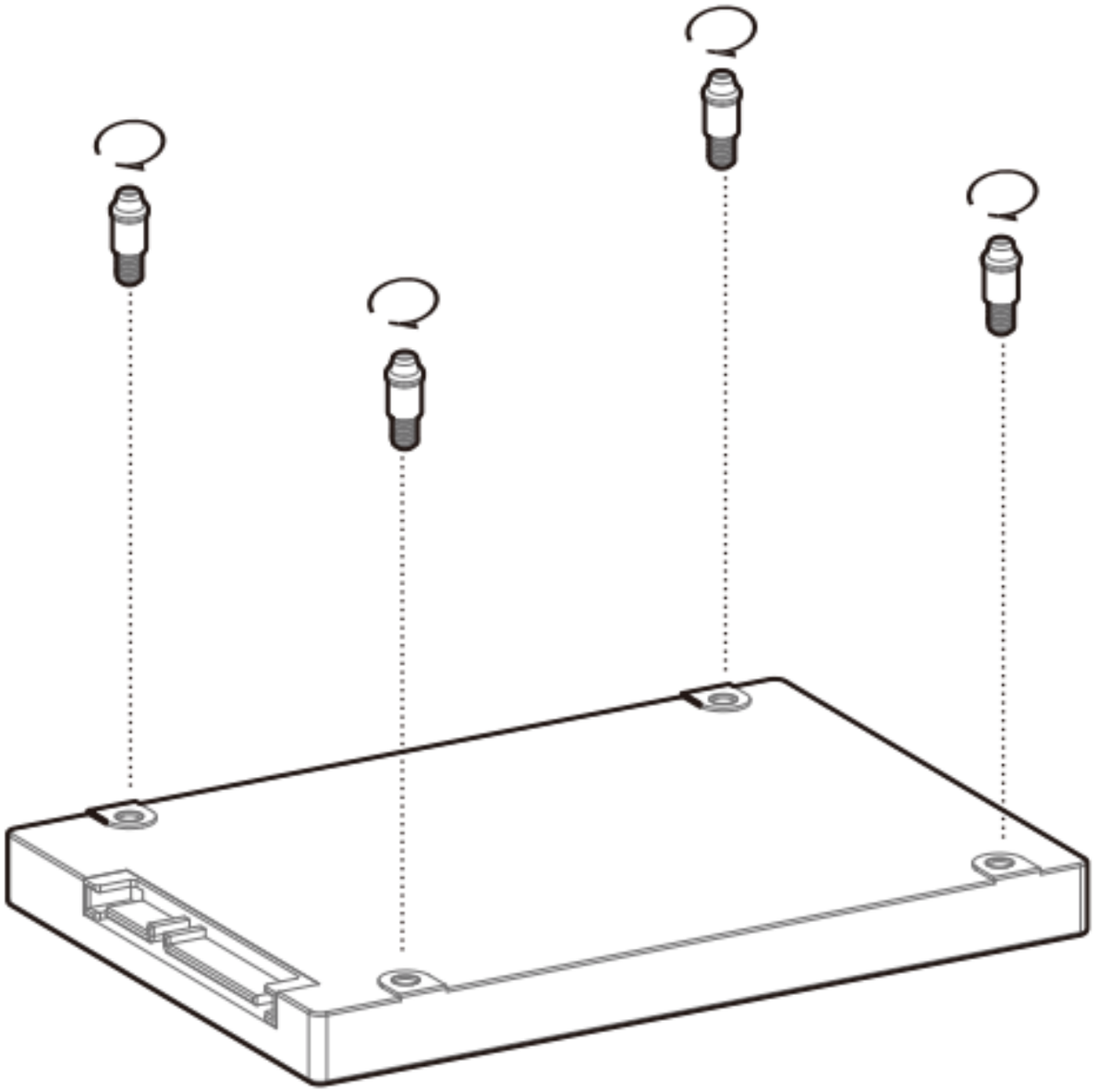

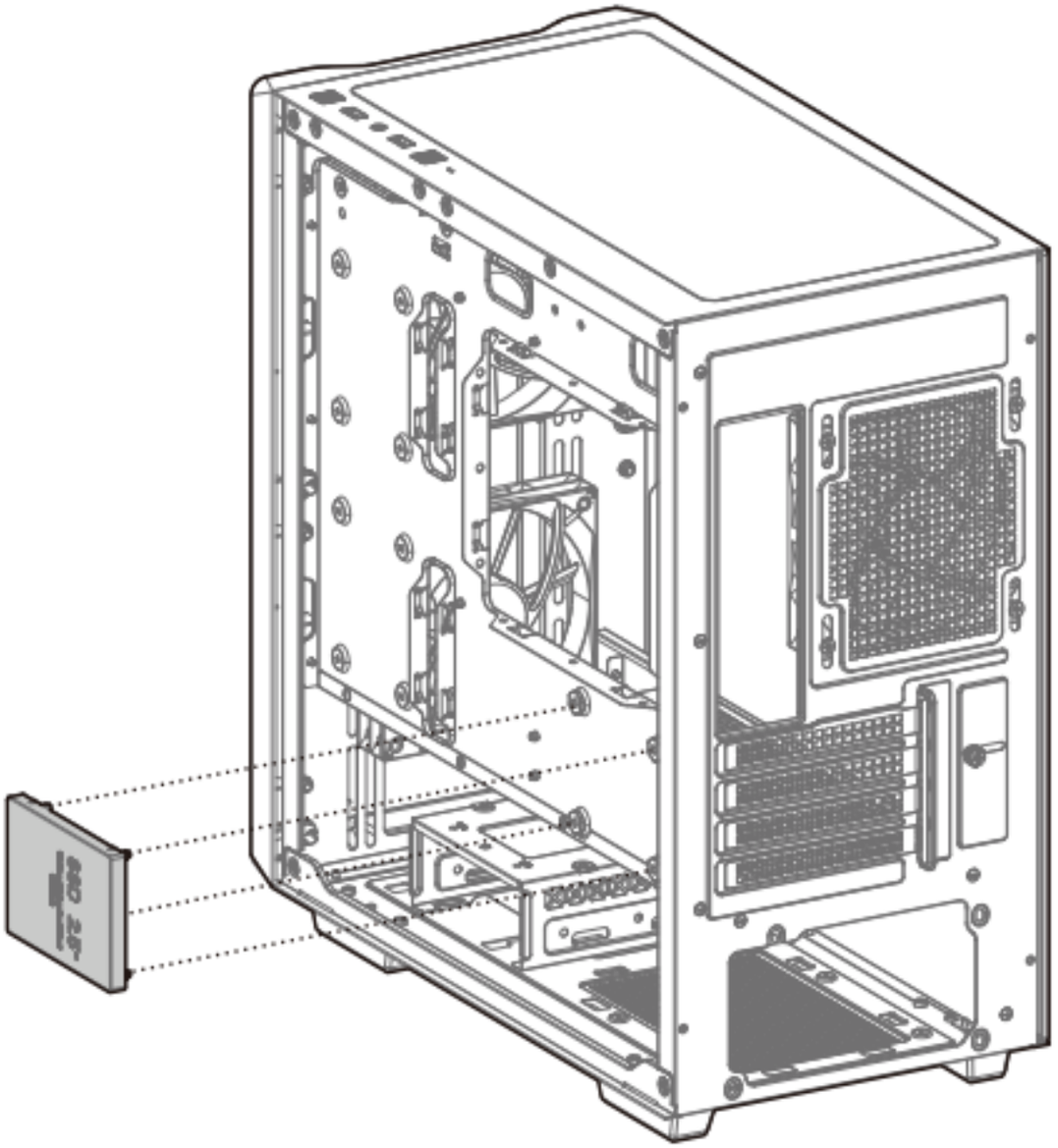
HDD 2.5"

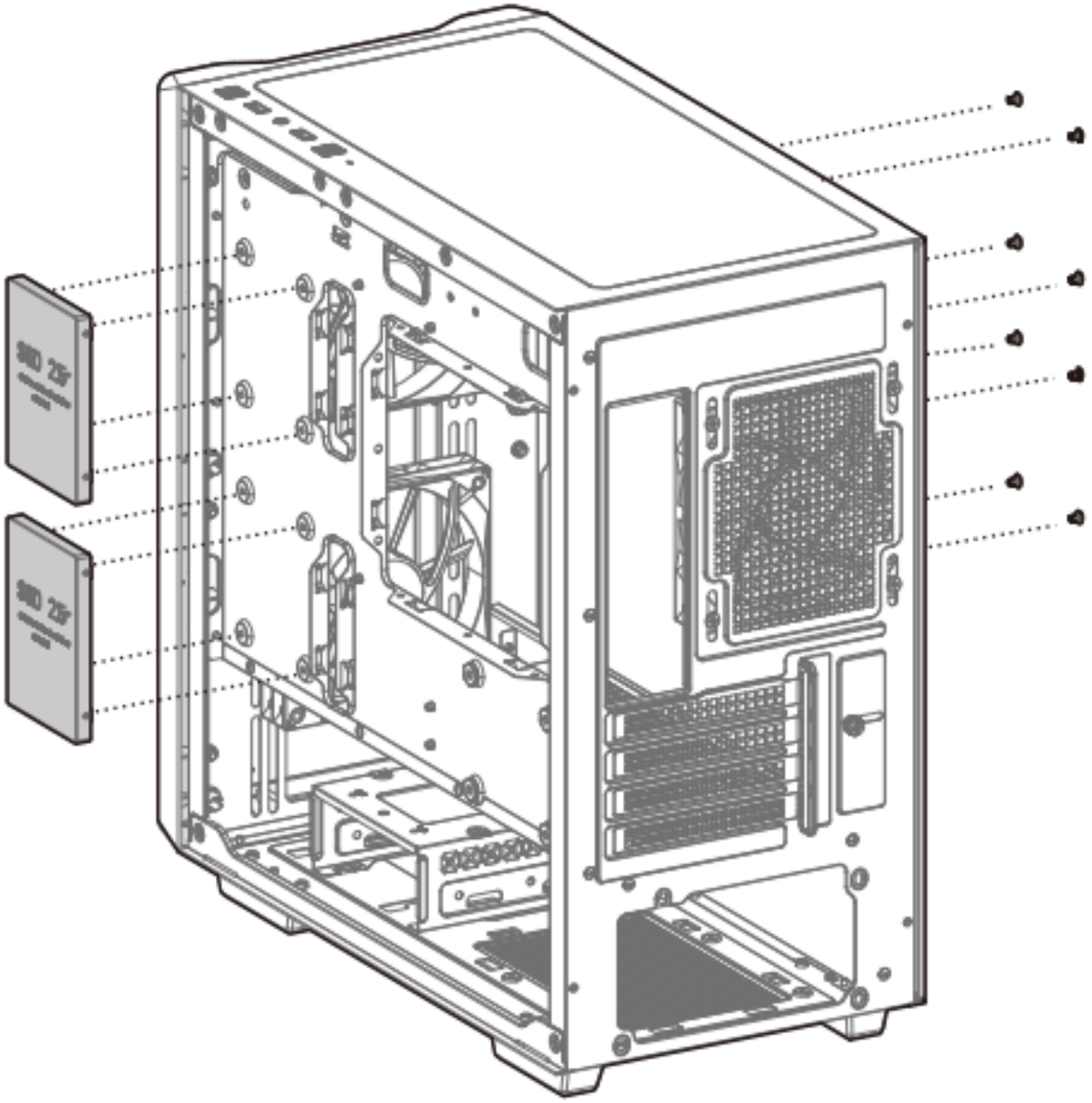

Installing the Power Supply

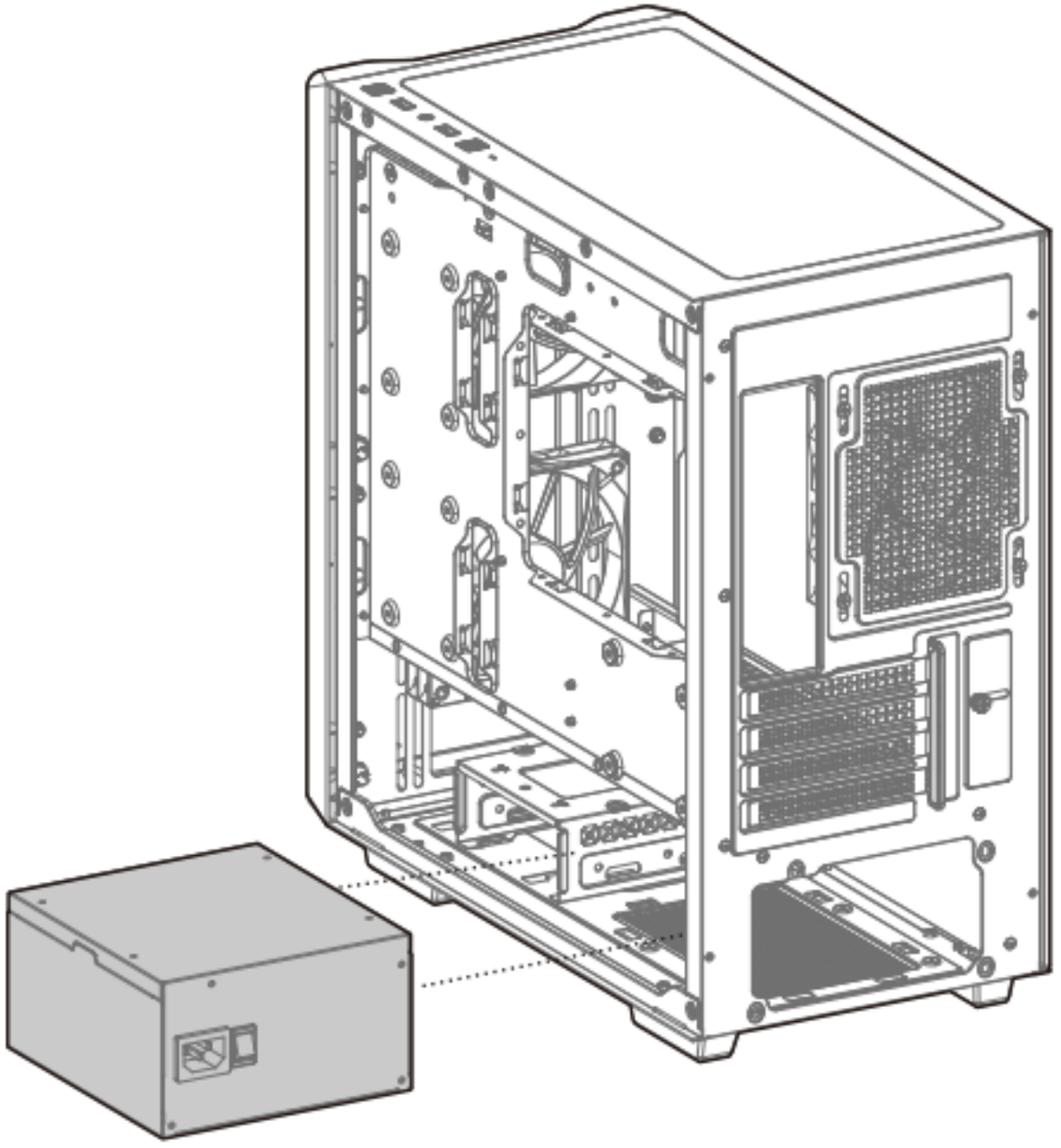

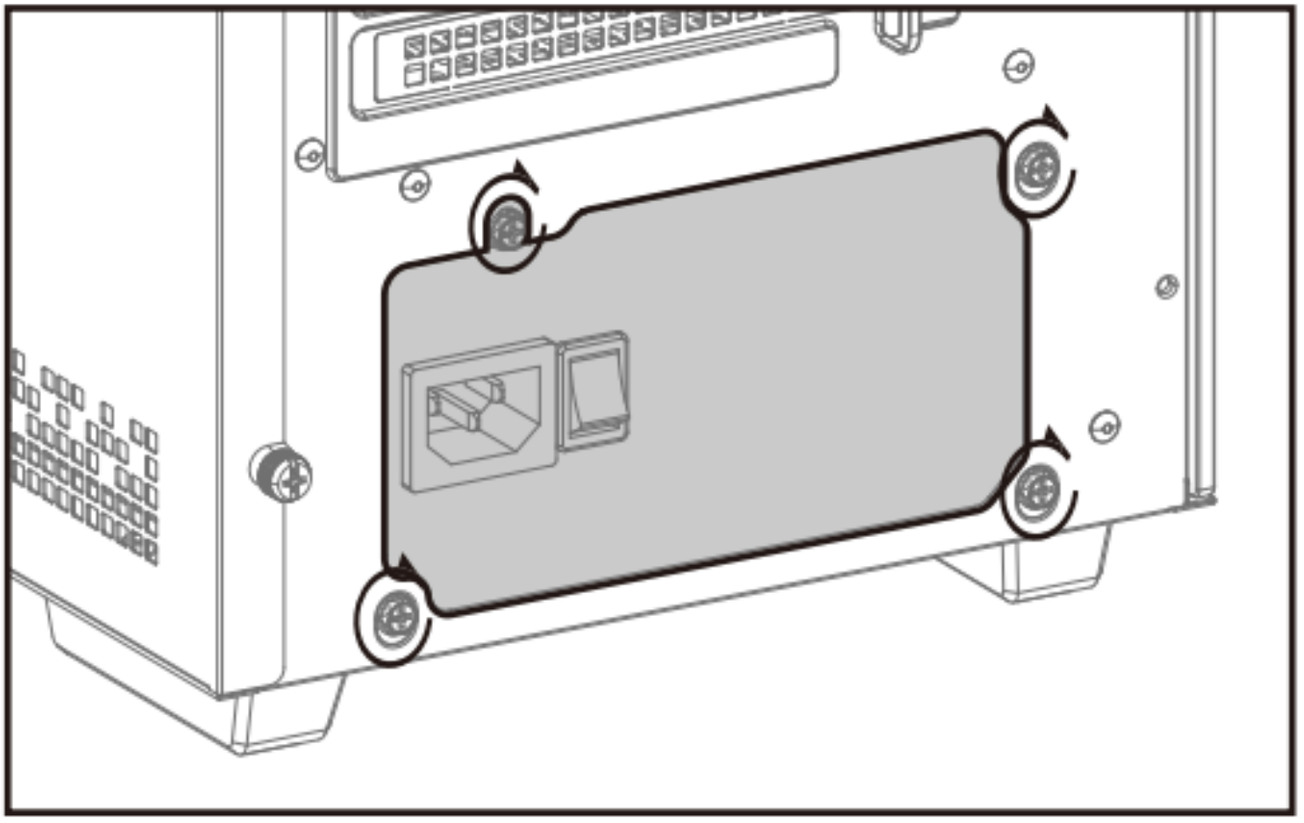

I/O Panel Introduction

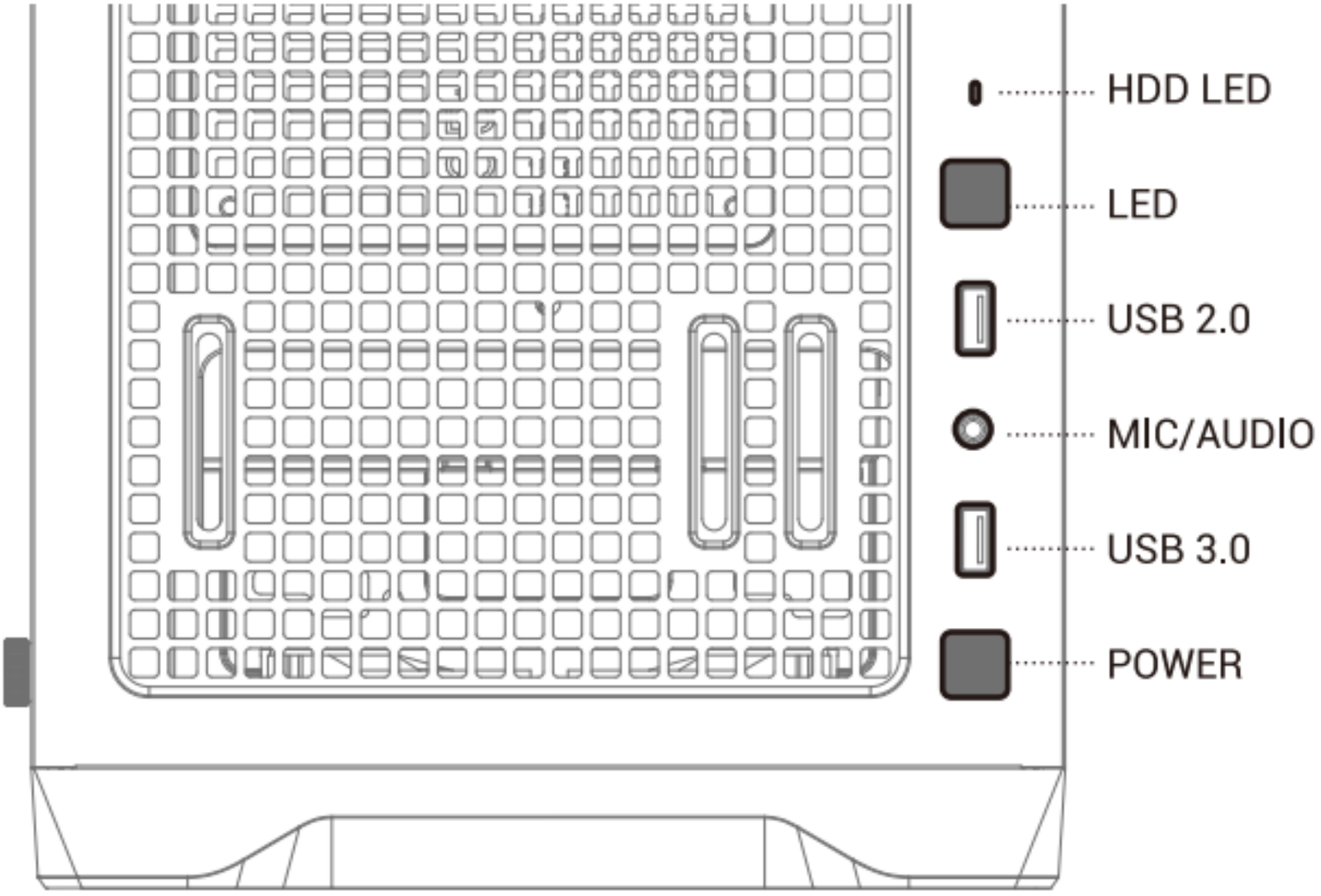

Installing the Front I/O Connectors

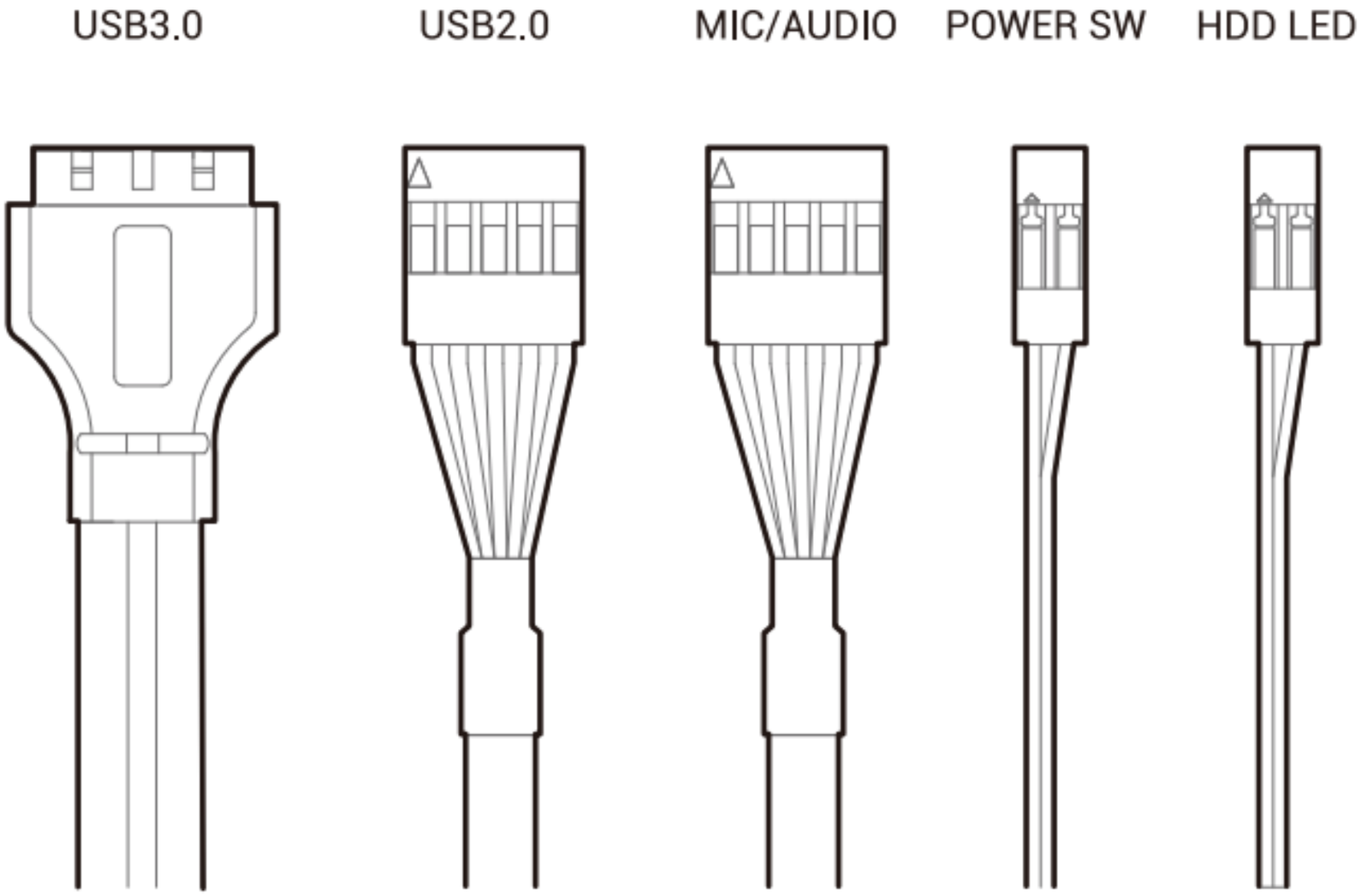

Manual RGB Wiring

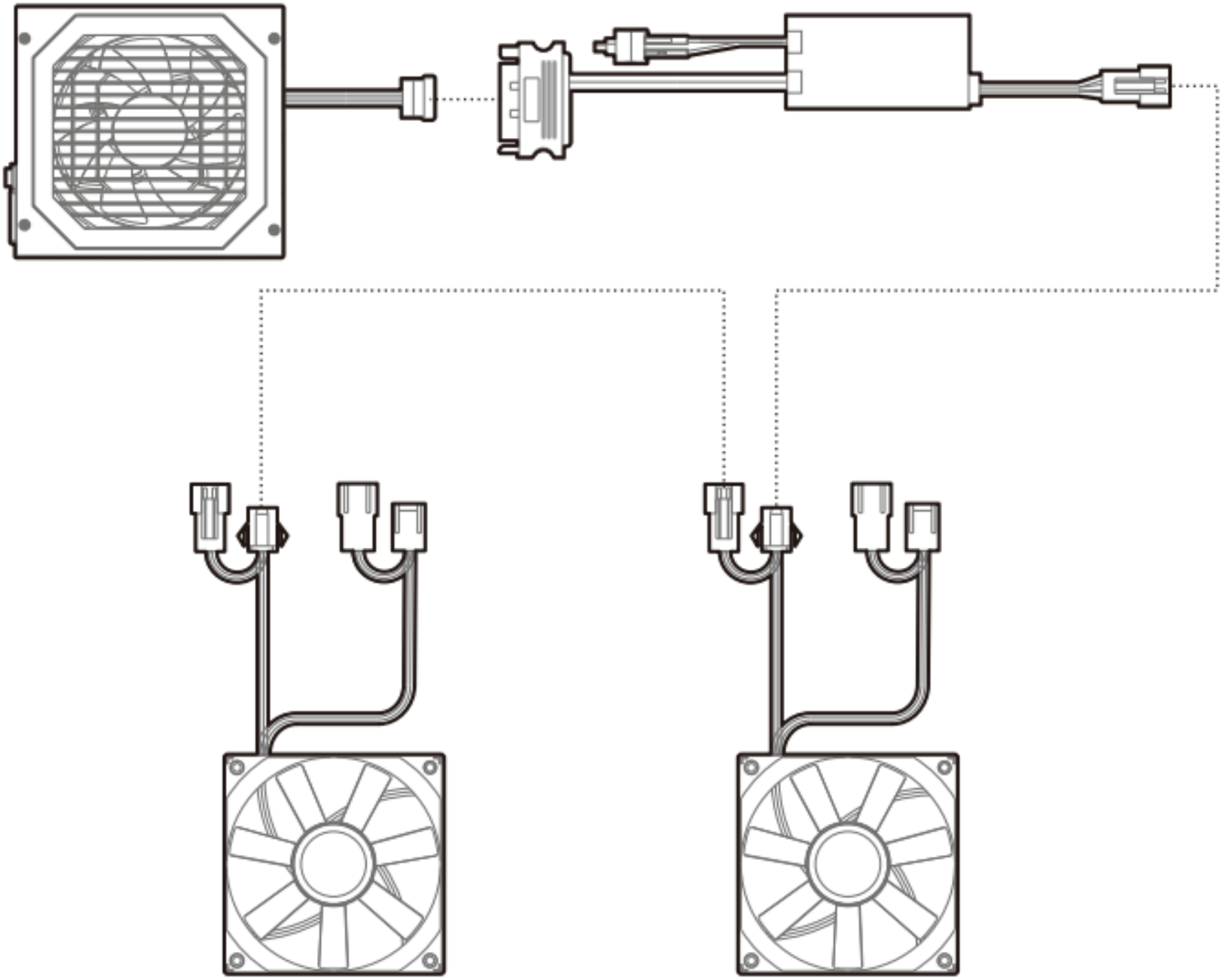

For reference only, please refer to the real product.

Motherboard RGB Synchronization

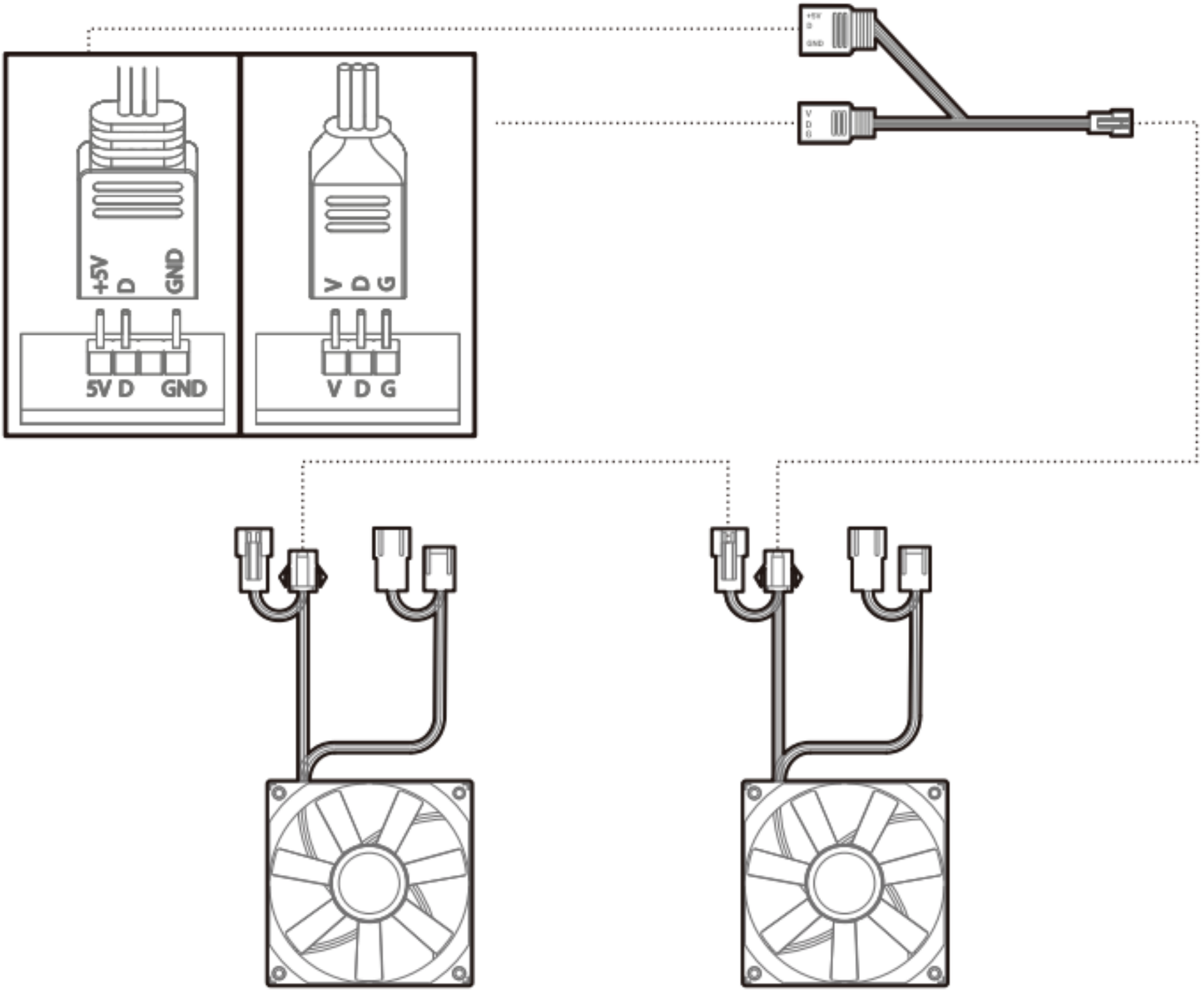

For reference only, please refer to the real product.

Fan Power Line Wiring

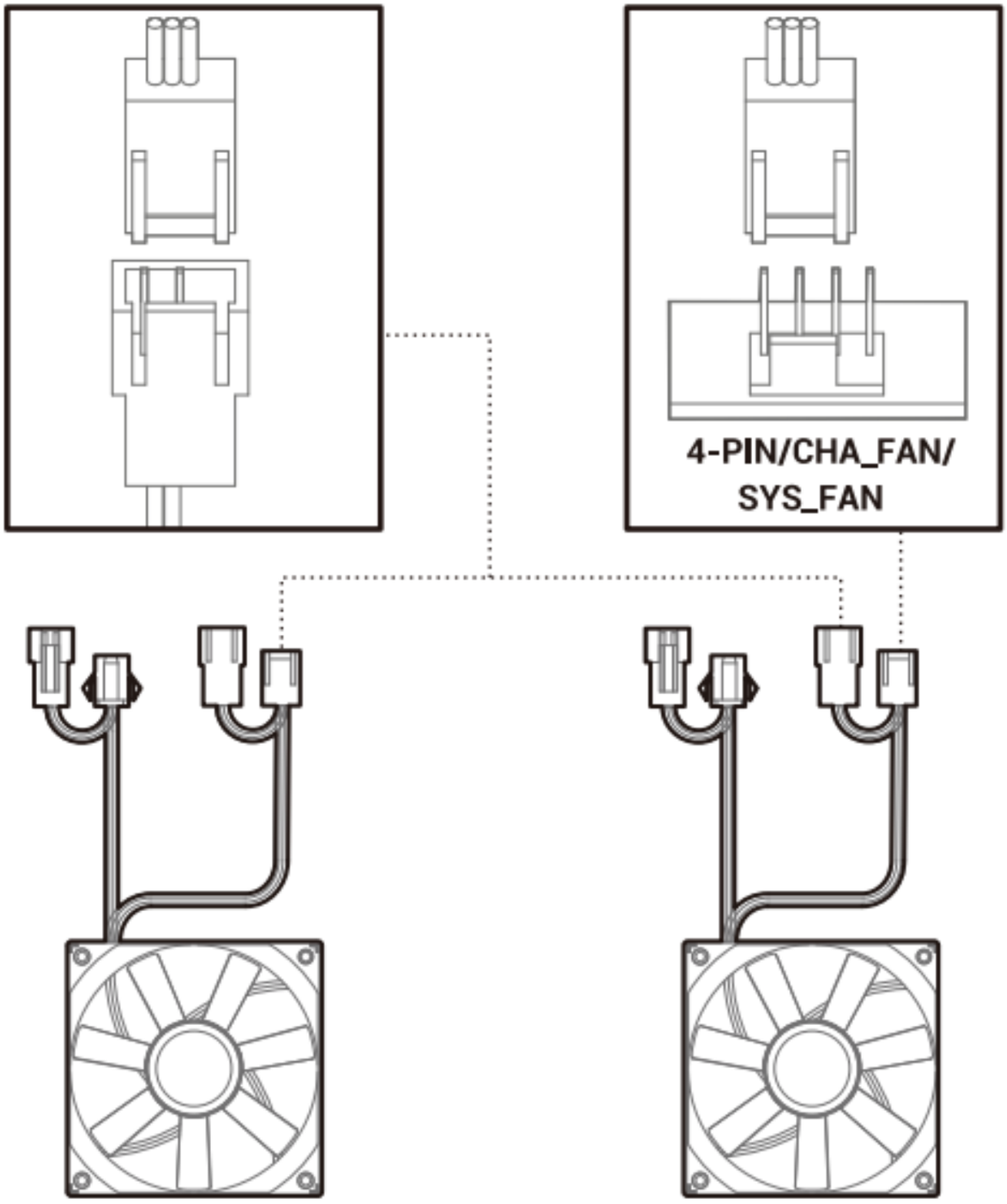

For reference only, please refer to the real product.

10
UK
CA

EN For more information, please check our website at: www.deepcool.com

DE Für weitere Informationen besuchen Sie bitte unsere Website unter: www.deepcool.com

FR Pour plus d'informations, merci de visiter notre site internet: www.deepcool.com

ES Para más información, por favor,visite nuestra página en: www.deepcool.com

IT Per ulteriori informazioni, visitate il nostro sito web: www.deepcool.com

PT Para mais informação, visita o nosso website em: www.deepcool.com

CS Další informace najdete na našich webových stránkách: www.deepcool.com

SV För mer information, gå till vår hemsida på: www.deepcool.com

PL Więcej informacji można znaleźć na naszej stronie internetowej: www.deepcool.com

TR Daha Fazla bilgi için, lütfen websitemizi ziyaret ediniz: www.deepcool.com

RU Больше информации на сайте: www.deepcool.com

UK Щоб отримати додаткову інформацію, перегляньте наш веб-сайт: www.deepcool.com

KK Көбірек ақпарат алу үшін біздің вебсайтымызға кіріңіз: www.deepcool.com

JA 詳細については、以下URL先の公式WEBサイトをご確認ください: www.deepcool.com

KO 자세한 내용은 www.deepcool.com 에서 확인하실 수 있습니다

AR للمزيد من المعلومات , يرجى زيارة موقعنا على www.deepcool.com

TH สามารถดูข้อมูลเพิ่มเติมได้ที่เว็บไซต์: www.deepcool.com

VI Để biết thêm chi tiết, vui lòng kiểm tra tại website: www.deepcool.com

ZH 如需要更多信息，请浏览网站: www.deepcool.com

ZH 如需要更多信息，請瀏覽網站: www.deepcool.com