GamerStorm

CASTLE 240EX RGB

www.gamerstorm.com

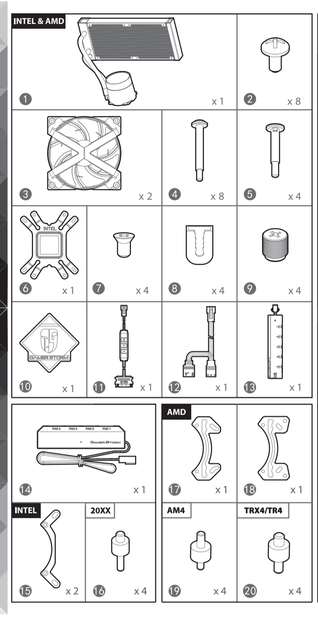

INTEL LGA1200 / LGA1151 / LGA1150 / LGA1155 / LGA1366

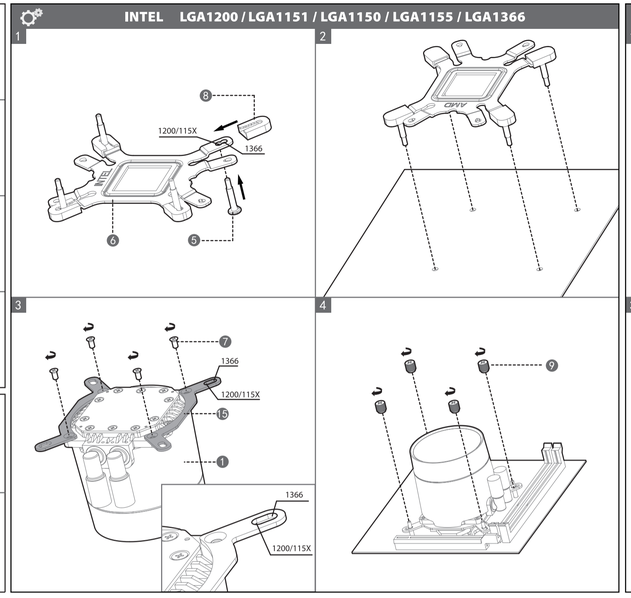

INTEL LGA2066 / LGA2011-v3 / LGA2011

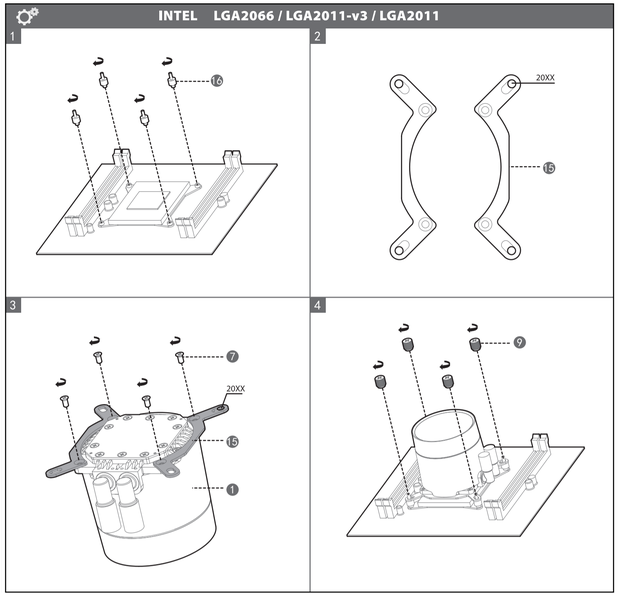

AMD AM3+ / AM3 / AM2+ / AM2 / FM2+ / FM2 / FM1

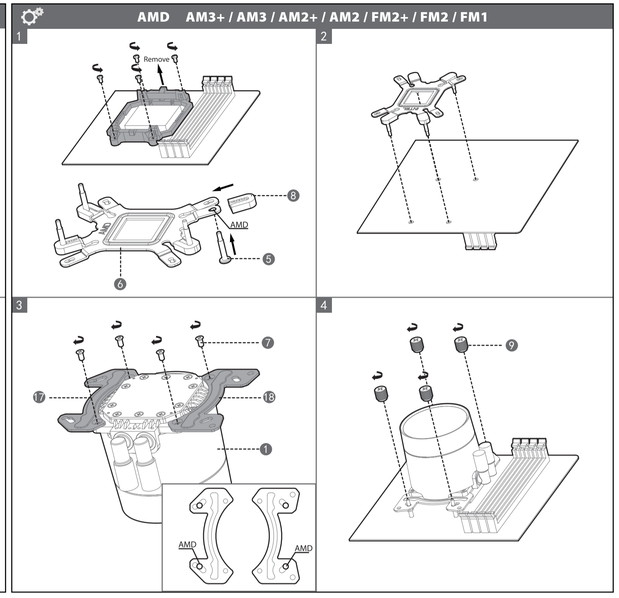

AMD AM4

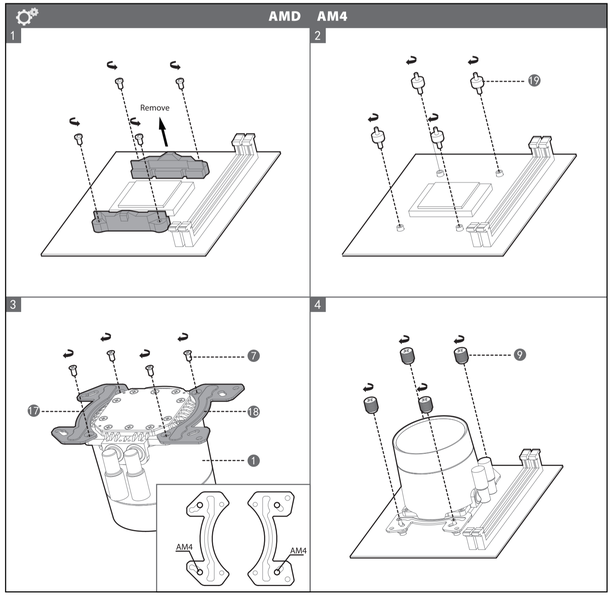

AMD TRX4/TR4

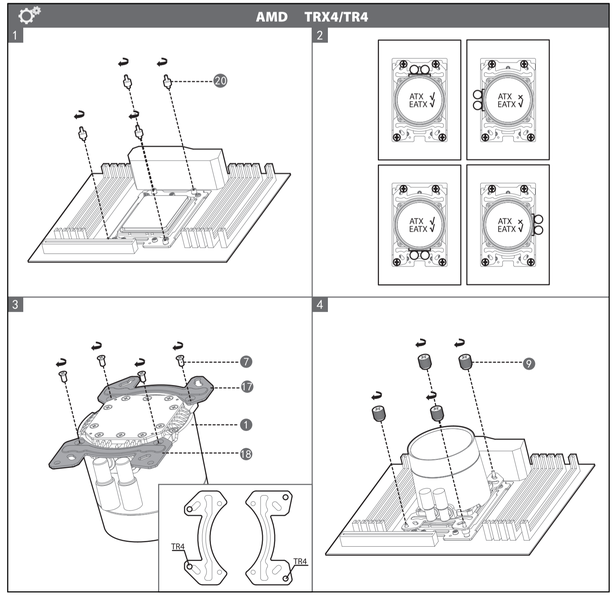

Fan & Radiator

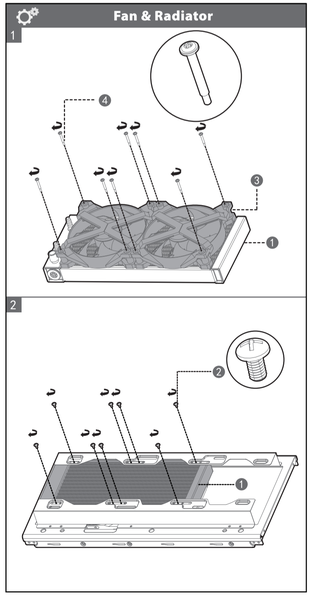

LOGO

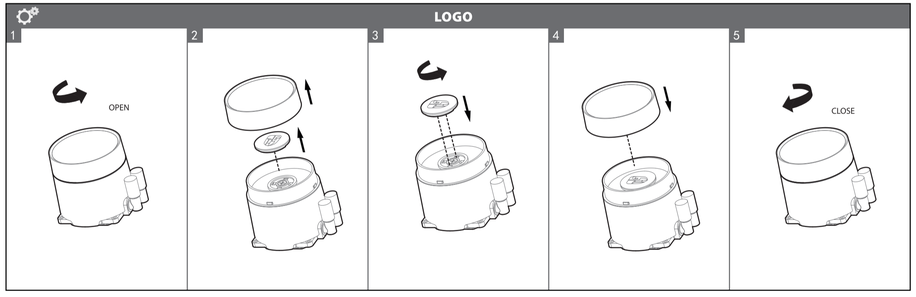
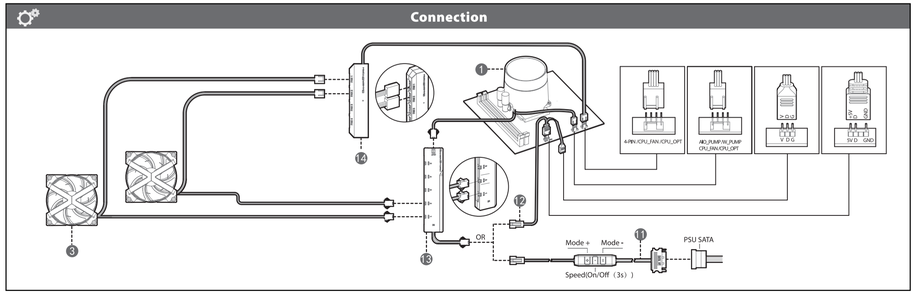
Connection